DRPX0

Performance sheet | **RX183/016-C** | Page 1/2

CUSTOMER:	DMG	**CUSTOMER ORDER REF:**	
DISTRIBUTOR:		**REDEX ORDER REF:**	220282
DESIGNATION:	DRPX0+M.10.3.XH.V1.22/32	**SERIAL NUMBER:**	910411
CODE:	RX134606-03	**MOTOR FLANGE CODE:**	

Pour la mise en service de l'appareil, se référer au User Manual DRP (182/027)

OUTPUT PINION					
	Pinion 1				E1256
Span dimension over 3 teeth					
		G1	23,466 $^{-0,071}_{-0,082}$	Cmm	23.39
		g1	0,021	Di	0.01
	Pinion 2				E1263
Span dimension over 3 teeth					
		G2	23,466 $^{-0,071}_{-0,082}$	Cmm	23.39
		g2	0,021	Di	0.01
Height setting					
		h0	26	Di	25.985
		a	9.075	Di	9.0666

SPECIFIC REMARKS:

***Akzeptiert gemäß Redex Abweichung RX15196**

Product images are for illustrative purposes only.

REDEX
1, Rue Paul De Fontenay
F- 45210 FERRIERES
www.redex-group.com
Tel: +33 2 38 94 42 00
Fax: +33 2 38 94 42 99
Email: info@redex-group.com

DRPX0

Performance sheet | **RX183/016-C** | Page 2/2

EXTERNAL DIMENSIONS & INTERFACES: **SN:** 910411

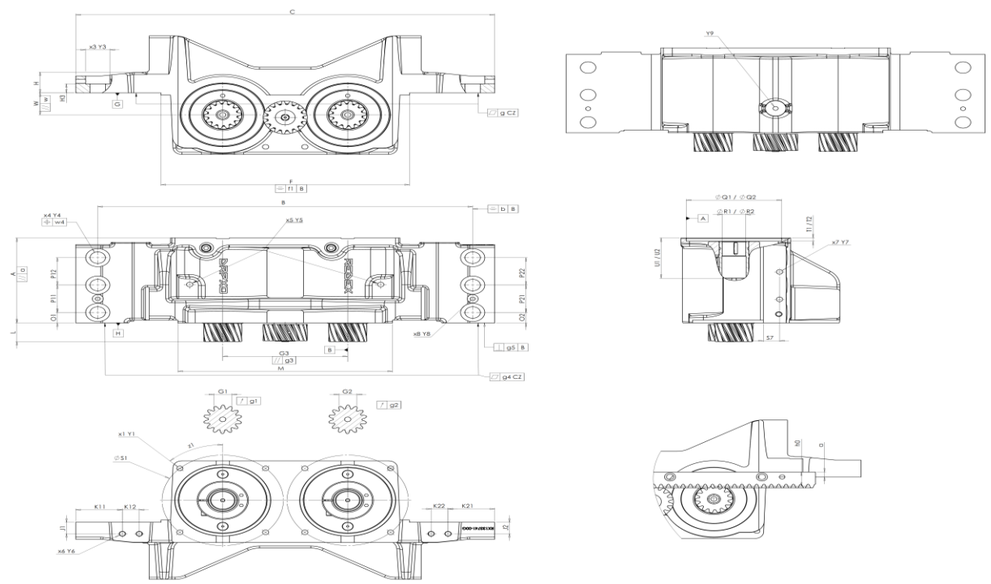

General tolerance: Js13	Cmm	Automatic / manual coordinate-measuring machine	µm	Micrometer	Cr	Calliper rule	Di	Dial indicator	Pg	Plug gauge

	HOUSING requirement				HOUSING measure		HOUSING requirement				HOUSING measure		MOTOR FLANGE requirement				MOTOR FLANGE measure
					F3357	G		W	40 $^{+0,025}_{-0,025}$	Cmm	40.017	A	Ø	Q1	130 JS6 $^{+0,012}_{-0,012}$	Cmm	130.006
H		A	155	Cmm	155.035		//	w	0,03	Cmm	0.006		Ø	R1	32 F7 $^{+0,05}_{+0,025}$	µm	32.03
		a	0,03	Cmm	0.011			O1	19	Cmm	19			T1	6	Pg	6.032
		B	510	Cmm	510			O2	19	Cmm	19			U1	73 min	Pg	73.26
	⌯	b	0,5	Cmm	0.09			P11	50	Cmm	50						
		C	570	Cr	570			P21	50	Cmm	50		Ø	Q2	130 JS6 $^{+0,012}_{-0,012}$	Cmm	130.006
		F	338 $^{0}_{-0,5}$	Cr	337.775			P12	50	Cmm	50		Ø	R2	32 F7 $^{+0,05}_{+0,025}$	µm	32.035
	⌯	f1	0,5	Cr	0.31			P22	50	Cmm	50			T2	6	Pg	6.049
	x3	Y3	2x3 Ø33	Cr	2x3 Ø33		x4	Y4	2x3 Ø21	Cmm	2x3 Ø21			U2	73 min	Pg	73.4
		G3	170	Cmm	170.029		⌖	w4	0,2	Cr	0,2						
	//	g3	0,03	Cmm	0.007		x5	Y5	2 M10x17	Cr	2 M10x17						
	▱	g	0,03	Cmm	0.011		x7	Y7	2x2 M10x15	Cr	2x2 M10x15						
	▱	g4	0,03	Cmm	0.004			S7	22	Cr	22						
	⊥	g5	0,05	Cmm	0.012		x8	Y8	2 M8	Cr	2 M8						
		H	38	Cr	38		x1	Y1	2x4 M10x20	Cr	2x4 M10x20						
		L	34 $^{+0,55}_{-0,4}$	Cmm	34,225 à 34,20		at	Z1	45°	Cr	45°						
		K21	63,5	Cr	63,5		on PCD	S1	165	Cr	165						
		K22	23	Cr	23		x6	Y6	2x2 G1/8	Cr	2x2 G1/8						
		Y9	M8x1,0	Pg	M8x1,0			J1	21	Cr	21						
		M	292	Cmm	292			J2	21	Cr	21						
		H3	16,5	Cr	16,5			K11	63,5	Cr	63,5						
								K12	23	Cr	23						

	Line	Stiffness
Torsional stiffness (Nm/arcmin)	1	40
	2	40
Radial stiffness (N/µm)	1	164
	2	171*

Noise level	
@1500 rpm input (dB(A))	68.0

No-load input torque	
Line 1	0,2 Nm
Line 2	0,2 Nm

Date: 06/02/2026 **Visa:** C DE MIRANDA

Version: C

REDEX
1, Rue Paul De Fontenay
F- 45210 FERRIERES
www.redex-group.com
Tel: +33 2 38 94 42 00
Fax: +33 2 38 94 42 99
Email: info@redex-group.com