KRP 0

PERFORMANCE SHEET	RX183-006-A	Page 1/2

CUSTOMER:	STRIGON	**CUSTOMER ORDER REF:**	*842/BR24 STRGON
DISTRIBUTOR:		**REDEX ORDER REF:**	219417
DESIGNATION:	KRP0+M.10.3.143H.V1.22/32	**SERIAL NUMBER:**	909300
CODE:	RX134492-03	**MOTOR FLANGE CODE:**	RX128707-05

For the installation, please refer to User Manual KRP (182/008)

SPECIFIC REMARKS:

Product images are for illustrative purposes only.

REDEX
1, Rue Paul De Fontenay
F- 45210 FERRIERES
www.redex-group.com
Tel: +33 2 38 94 42 00
Fax: +33 2 38 94 42 99
Email: info@redex-group.com

KRP 0

PERFORMANCE SHEET	RX183-006-A	Page 2/2

EXTERNAL DIMENSIONS & INTERFACES: **SN:** 909300

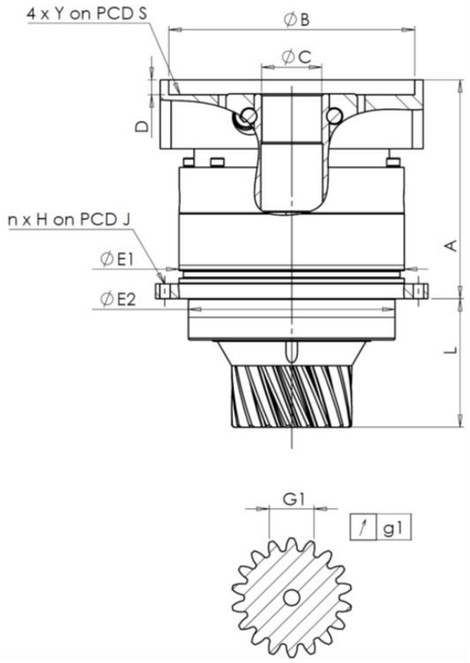

General tolerance: Js13	Cmm	Automatic / manual coordinate-measuring machine	µm	Micrometer	Cr	Calliper rule	Di	Dial indicator	Pg	Plug gauge

HOUSING

requirement				measure
				F333
Ø	E1	120h7 $^{0}_{-0,035}$	µm	119,99
Ø	E2	110h7 $^{0}_{-0,035}$	µm	109,98
n x H on PCD J		8Ø5,5 on PCD 135	Cr	8Ø5,5 on PCD 135
			Cr	
	A	117,5	µm	117,77
	L	69	µm	69,24

OUTPUT PINION

requirement				measure
				F471
Span dimension over 3 teeth				
	G1	23,466 $^{-0,071}_{-0,082}$	Cmm	23,385
↗	g1	0,021	Di	0,01
No-load input torque				
Line 1				0,2 Nm

MOTOR FLANGE

requirement				measure
Ø	B	131	µm	131
Ø	C	32 $^{+0,05}_{+0,025}$	µm	32,03
	D	8	Cr	8,5
Ø	S1	165	Cr	165
Ø	Y1	M10	Pg	M10

	Line	Stiffness
Torsional stiffness (Nm/arcmin)	1	40
Radial stiffness (N/µm)	1	160

Noise level

1600 rpm input (dB(A))	67,0

Date: 05/12/2024 **Visa:** C DE MIRANDA

Version: A

REDEX
1, Rue Paul De Fontenay
F- 45210 FERRIERES
www.redex-group.com
Tel: +33 2 38 94 42 00
Fax: +33 2 38 94 42 99
Email: info@redex-group.com