KRP 0

PERFORMANCE SHEET | **RX183-006-A** | Page 1/2

CUSTOMER:	MAKA	**CUSTOMER ORDER REF:**	512843 MAKA
DISTRIBUTOR:	REDEX GmbH	**REDEX ORDER REF:**	216747
DESIGNATION:	KRP0+M.10.3.183H.V1 .11/19	**SERIAL NUMBER:**	906484
CODE:	RX134445-03	**MOTOR FLANGE CODE:**	RX129009-01

For the installation, please refer to User Manual KRP (182/008)

SPECIFIC REMARKS:

****** not controlled, painted area**

Product images are for illustrative purposes only.

REDEX
1, Rue Paul De Fontenay
F- 45210 FERRIERES
www.redex-group.com
Tel: +33 2 38 94 42 00
Fax: +33 2 38 94 42 99
Email: info@redex-group.com

KRP 0

PERFORMANCE SHEET | **RX183-006-A** | Page 2/2

EXTERNAL DIMENSIONS & INTERFACES: **SN:** 906484

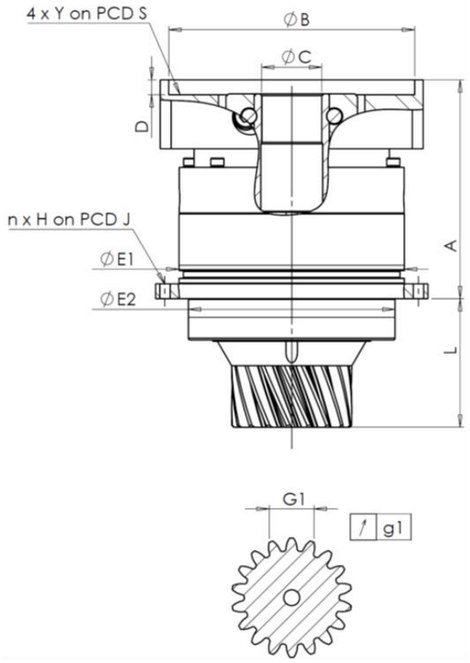

General tolerance: Js13	Cmm	Automatic / manual coordinate-measuring machine	µm	Micrometer	Cr	Calliper rule	Di	Dial indicator	Pg	Plug gauge

HOUSING

	requirement				measure
					J1870
	Ø	E1	120h7 $^{0}_{-0,035}$	µm	****
	Ø	E2	110h7 $^{0}_{-0,035}$	µm	109,98
	n x H on PCD J		8Ø5,5 on PCD 135	Cr	8Ø5,5 on PCD 135
				Cr	
		A	107,5	µm	107,99
		L	69	µm	69,3

OUTPUT PINION

	requirement				measure
					L1035
	Span dimension over 3 teeth				
		G1	23,278 $^{0}_{-0,023}$	Cmm	23,275
	↗	g1	0,021	Di	0,02
	No-load input torque				
	Line 1				0,3 Nm

MOTOR FLANGE

	requirement				measure
	Ø	B	81	µm	81
	Ø	C	19F7 $^{+0,041}_{+0,02}$	µm	19,04
		D	5	Cr	5,5
	Ø	S1	100	Cr	100
	Ø	Y1	4xM6	Pg	4xM6

	Line	Stiffness
Torsional stiffness (Nm/arcmin)	1	40
Radial stiffness (N/µm)	1	160

Noise level

1600 rpm input (dB(A))	

Date: 27/04/2022 **Visa:** P VASLIER

Version: A

REDEX
1, Rue Paul De Fontenay
F- 45210 FERRIERES
www.redex-group.com
Tel: +33 2 38 94 42 00
Fax: +33 2 38 94 42 99
Email: info@redex-group.com