KRP

PERFORMANCE SHEET — RX183-006-A

CUSTOMER:	GUDEL LINEARTEC Co. Ltd	**CUSTOMER ORDER REF:**	RX110315T GUDTW
DISTRIBUTOR:		**REDEX ORDER REF:**	216234
DESIGNATION:	KRP3+R.31.4.H	**SERIAL NUMBER:**	906025
CODE:	RX128565-12	**MOTOR FLANGE CODE:**	

For the installation, please refer to User Manual KRP (182/008)

SPECIFIC REMARKS:

Product images are for illustrative purposes only.

REDEX
1, Rue Paul De Fontenay
F- 45210 FERRIERES
www.redex-group.com
Tel: +33 2 38 94 42 00
Fax: +33 2 38 94 42 99
Email: info@redex-group.com

KRP

PERFORMANCE SHEET — RX183-006-A

EXTERNAL DIMENSIONS & INTERFACES: **SN:** 906025

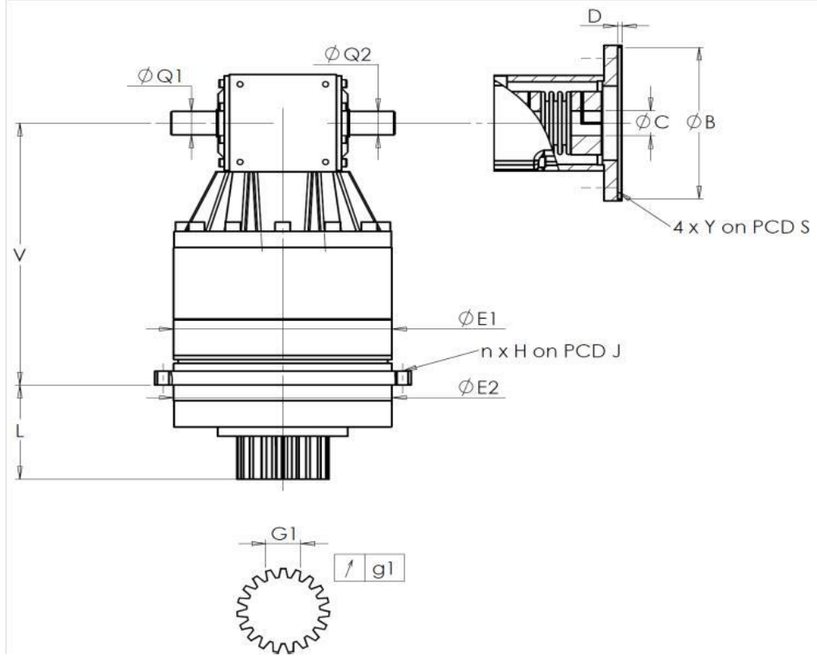

General tolerance: Js13	Cmm	Automatic / manual coordinate-measuring machine	µm	Micrometer	Cr	Calliper rule	Di	Dial indicator	Pg	Plug gauge

HOUSING

		requirement			measure
					E1984
	E1	255h7 $^{0}_{-0,052}$	µm	254,99
	E2	255h7 $^{0}_{-0,052}$	µm	254,99
	n x H on PCD J	16 Ø13,5 on PCD 280	Cr	16 Ø13,5 on PCD 280
			Cr	
	V	337	µm	337,31
	L	121	µm	121,00
Ø	Q1	30 $^{+0,009}_{-0,004}$	µm	30,002
Ø	Q2	30 $^{+0,009}_{-0,004}$	µm	29,997

OUTPUT PINION

	requirement			measure
				J3484
Span dimension over 3 teeth				
	G1	39,25 $^{0}_{-0,03}$	Cmm	39,225
↗	g1	0,022	Di	0,005
No-load input torque				
	Line 1			2 Nm

	Line	Stiffness
Torsional stiffness (Nm/arcmin)	1	473,03
Radial stiffness (N/µm)	1	1185

MOTOR FLANGE

		requirement		measure
				-
Ø	B		µm	
Ø	C		µm	
	D		Cr	
Ø	S1		Cr	
Ø	Y1		Pg	

Noise level

@1600 rpm input (dB(A))	65,0

Date: 19/01/2022 **Visa:** NLAABID

Version: A

REDEX
1, Rue Paul De Fontenay
F- 45210 FERRIERES
www.redex-group.com
Tel: +33 2 38 94 42 00
Fax: +33 2 38 94 42 99
Email: info@redex-group.com