KRPX

Performance sheet	RX183-007-D	Page 1/2

CUSTOMER:	DOOSAN	**CUSTOMER ORDER REF:**	X7297-001 DOOSAN
DISTRIBUTOR:		**REDEX ORDER REF:**	215042
DESIGNATION:	KRPX3+M.21.3.H.28/38	**SERIAL NUMBER:**	904407
CODE:	RX131507-11	**MOTOR FLANGE CODE:**	RX128581-01

For the installation, please refer to User Manual KRPX (182/010)

SPECIFIC REMARKS:

Product images are for illustrative purposes only.

REDEX
ZI-BP79
F45210 FERRIERES
www.redex.fr
Tel: +33 2 38 94 42 00
Fax: +33 2 38 94 42 99
Email: info@redex.fr

KRPX

Performance sheet	RX183-007-D	Page 2/2

EXTERNAL DIMENSIONS & INTERFACES: **SN:** 904407

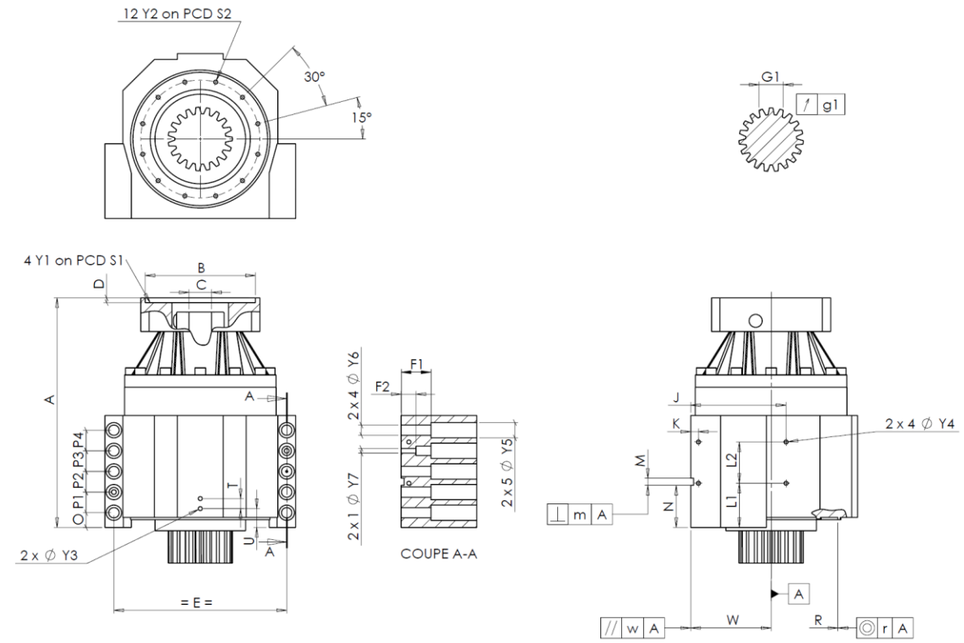

General tolerance: Js13 | *Cmm* Automatic / manual coordinate-measuring machine | *µm* Micrometer | *Cr* Calliper rule | *Di* Dial indicator | *Pg* Plug gauge

HOUSING requirement					HOUSING measure	HOUSING requirement					HOUSING measure	MOTOR FLANGE requirement				MOTOR FLANGE measure
					B7325		L1	75		Cr	75					
	Y2	M8x15		Pg	M8x15		L2	70		Cr	70	Ø	B	181	µm	180,97
Ø	S2	200	+0,1 -0,1	Cr	200		J	160		Cr	160	Ø	C	38 +0,05 +0,025	µm	38,03
	A	389,5		µm	389,59		K	13		Cr	13		D	8	Cr	8,48
	E	290		Cr	290	2 x 4Ø	Y4	M8x15		Pg	M8x15	Ø	S1	215	Cr	215
	O	25		Cr	25		F1	50		Cr	50	Ø	Y1	M12	Pg	M12
	P1	35		Cr	35		F2	25		Cr	25					
	P2	35		Cr	35	2 x 1Ø	Y7	12		µm	12	**No-load input torque**				
	P3	35		Cr	35	2 x 4Ø	Y6	17,5		µm	17,5	Line 1				2 Nm
	P4	35		Cr	35	2 x 5Ø	Y5	26		µm	26					
	T	17		Cr	17		M H6	12	+0,011 0	Cmm	12,011				**Line**	**Stiffness**
	U	32		Cr	32	⊥	m	0,05		Cmm	0,01	Torsional stiffness (Nm/arcmin)			1	473,03
2 x 1Ø	Y3	M8x15		Pg	M8x15		N	71,5	+0,1 -0,1	Cmm	71,469					
	R	226	+0,2 +0,1	Cmm	226,142	A	W	135	+0,035 -0,035	Cmm	135,018	Radial stiffness (N/µm)			1	1043
◎	r	0,1		Cmm	0,021	//	w	0,03	/A	Cmm	0,001					

OUTPUT PINION						Noise level	
					L4140	@1600 rpm input (dB(A))	67,0
Span dimension over 3 teeth							
		G1	39,25	0 -0,03	Cmm	39,25	
	↗	g1	0,022		Di	0,015	

Date: 12/05/2020 **Visa:** C DE MIRANDA

Version: A

REDEX
ZI-BP79
F45210 FERRIERES
www.redex.fr
Tel: +33 2 38 94 42 00
Fax: +33 2 38 94 42 99
Email: info@redex.fr