PERFORMANCE SHEET — RX183-006-A

CUSTOMER:	AWEA	**CUSTOMER ORDER REF:**	MAIL FROM LIAO JING KAI
DISTRIBUTOR:	GUDEL LINEARTEC Co. Ltd	**REDEX ORDER REF:**	213453
DESIGNATION:	KRP2+R.21.4.H	**SERIAL NUMBER:**	901503
CODE:	RX128908-11 RE205611-00	**MOTOR FLANGE CODE:**	

For the installation, please refer to User Manual KRP (182/008)

SPECIFIC REMARKS:

Product images are for illustrative purposes only.

REDEX
ZI-BP79
F45210 FERRIERES
www.redex.fr
Tel: +33 2 38 94 42 00
Fax: +33 2 38 94 42 99
Email: info@redex.fr

KRP - SAV - 18/09/2018 | Page 2/2

PERFORMANCE SHEET — RX183-006-A

EXTERNAL DIMENSIONS & INTERFACES: **SN:** 901503

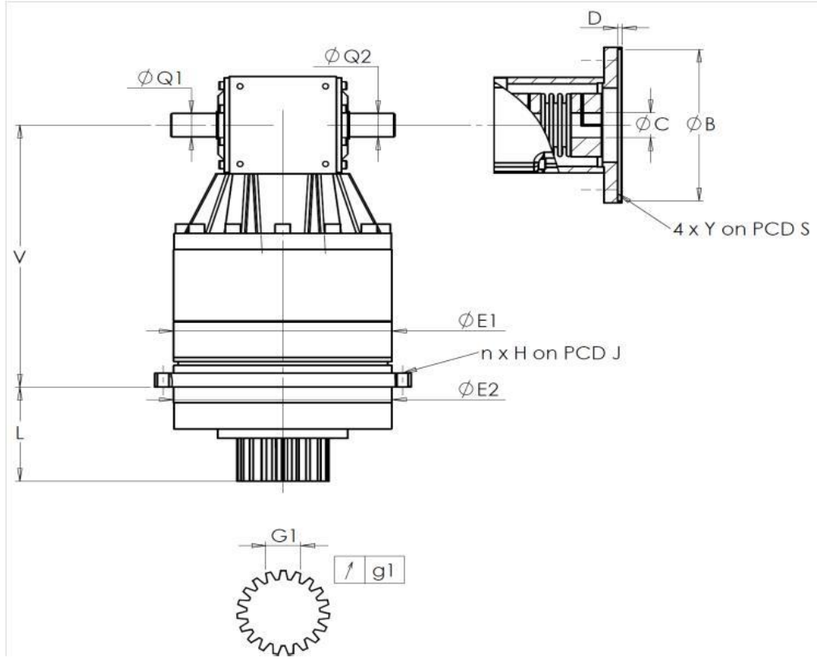

General tolerance: Js13	Cmm	Automatic / manual coordinate-measuring machine	µm	Micrometer	Cr	Calliper rule	Di	Dial indicator	Pg	Plug gauge

HOUSING

	requirement				measure
					A5808
		E1	212h7 $^{0}_{-0,046}$	µm	211.98
		E2	200h7 $^{0}_{-0,046}$	µm	199.99
	n x H on PCD J		12 Ø9 on PCD 233	Cr	
				Cr	OK
		V	289	µm	289
		L	94	µm	94
	Ø	Q1	25 $^{+0,009}_{-0,004}$	µm	25.007
	Ø	Q2	25 $^{+0,009}_{-0,004}$	µm	25.008

OUTPUT PINION

	requirement				measure
					N2397
	Span dimension over 4 teeth				
		G1	44,27 $^{0}_{-0,03}$	Cmm	44.25
	↗	g1	0,022	Di	0.005
	No-load input torque				
	Line 1				0,5 Nm

	Line	Stiffness
Torsional stiffness (Nm/arcmin)	1	243,75
Radial stiffness (N/µm)	1	410

MOTOR FLANGE

	requirement				measure
					-
	Ø	B		µm	
	Ø	C		µm	
		D		Cr	
	Ø	S1		Cr	
	Ø	Y1		Pg	

Noise level

@1600 rpm input (dB(A))	73.5

Date: 17/09/2018 **Visa:** C DE MIRANDA

Version: A

REDEX
ZI-BP79
F45210 FERRIERES
www.redex.fr
Tel: +33 2 38 94 42 00
Fax: +33 2 38 94 42 99
Email: info@redex.fr