KRPX

Performance sheet — RX183-007-D

Page 1/2

CUSTOMER:	TOSHIBA	**CUSTOMER ORDER REF:**	170621IB-1 TOSHIBA
DISTRIBUTOR:	S & F INC	**REDEX ORDER REF:**	212052
DESIGNATION:	KRPX4+M.17.3.H.35/48	**SERIAL NUMBER:**	900670
CODE:	RX131194-41	**MOTOR FLANGE CODE:**	RX129618-06

For the installation, please refer to User Manual KRPX (182/010)

SPECIFIC REMARKS:

***Accepted according the derogation RX9557**

Product images are for illustrative purposes only.

REDEX

ZI-BP79
F45210 FERRIERES
www.redex.fr

Tel: +33 2 38 94 42 00
Fax: +33 2 38 94 42 99
Email: info@redex.fr

KRPX

Performance sheet — RX183-007-D

Page 2/2

EXTERNAL DIMENSIONS & INTERFACES: **SN:** 900670

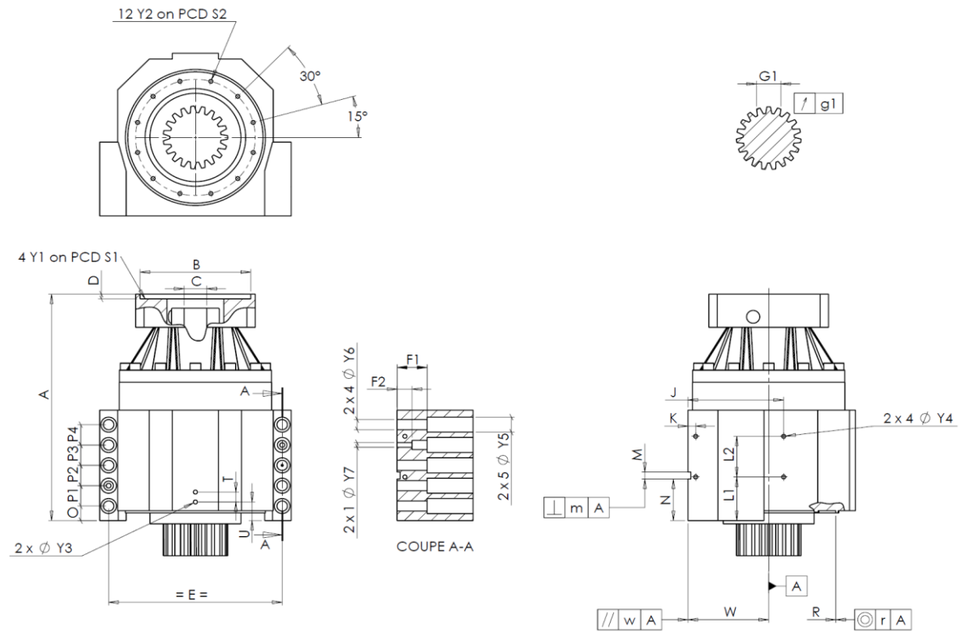

General tolerance: Js13	Cmm	Automatic / manual coordinate-measuring machine	µm	Micrometer	Cr	Calliper rule	Di	Dial indicator	Pg	Plug gauge

HOUSING requirement				HOUSING measure		HOUSING requirement				HOUSING measure		MOTOR FLANGE requirement				MOTOR FLANGE measure	
				M5427			L1	81		Cr	81						
		Y2	M8x16	Pg	OK		L2	79		Cr	79	Ø	B	251		µm	251
	Ø	S2	234 $^{+0,1}_{-0,1}$	Cr	234		J	185		Cr	185	Ø	C	42F7 $^{+0,050}_{+0,025}$		µm	42.04
		A	469	µm	470.18		K	15		Cr	15		D	8		Cr	8.56
		E	320	Cr	320	2 x 4Ø	Y4	M10x13		Pg	OK	Ø	S1	300		Cr	300
		O	20	Cr	20		F1	60		Cr	60	Ø	Y1	M16		Pg	OK
		P1	40	Cr	40		F2	30		Cr	30						
		P2	40	Cr	40	2 x 1Ø	Y7	14		µm	14	**No-load input torque**					
		P3	40	Cr	40	2 x 4Ø	Y6	22		µm	22	Line 1				1,5 Nm	
		P4	40	Cr	40	2 x 5Ø	Y5	33		µm	33						
		T	20	Cr	20		M H6	15 $^{+0,011}_{0}$		Cmm	15,008				**Line**	**Stiffness**	
		U	37	Cr	37	⊥	m	0,05		Cmm	0,023	Torsional stiffness (Nm/arcmin)			1	574,81	
	2 x 1Ø	Y3	M10x13	Pg	OK		N	72,5 $^{+0,1}_{-0,1}$		Cmm	72,471						
		R	255 $^{+0,2}_{+0,1}$	Cmm	255,137	A	W	158 $^{+0,035}_{-0,035}$		Cmm	158,025	Radial stiffness (N/µm)			1	1122	
	◎	r	0,1	Cmm	0,091	//	w	0,03	/A	Cmm	0,006						

OUTPUT PINION						Noise level	
					N660	@1300 rpm input (dB(A))	70,5 *
Span dimension over 3 teeth							
		G1	46,9 $^{0}_{-0,03}$	Cmm	46.885		
	↗	g1	0,022	Di	0,015		

Date: 13/10/2017 **Visa:** J ONGANER

Version: A

REDEX

ZI-BP79
F45210 FERRIERES
www.redex.fr

Tel: +33 2 38 94 42 00
Fax: +33 2 38 94 42 99
Email: info@redex.fr