KRP

PERFORMANCE SHEET	RX183-006-A	Page 1/2

CUSTOMER:	YONG JU PRECISION	**CUSTOMER ORDER REF:**	RX106312T YONG JU
DISTRIBUTOR:		**REDEX ORDER REF:**	212033
DESIGNATION:	KRP2+R.31.4.H	**SERIAL NUMBER:**	900654
CODE:	RX128908-12	**MOTOR FLANGE CODE:**	

For the installation, please refer to User Manual KRP (182/008)

SPECIFIC REMARKS:

***Accepted according the derogation RX9564**

Product images are for illustrative purposes only.

REDEX

ZI-BP79
F45210 FERRIERES
www.redex.fr

Tel: +33 2 38 94 42 00
Fax: +33 2 38 94 42 99
Email: info@redex.fr

KRP

PERFORMANCE SHEET	RX183-006-A	Page 2/2

EXTERNAL DIMENSIONS & INTERFACES: **SN:** 900654

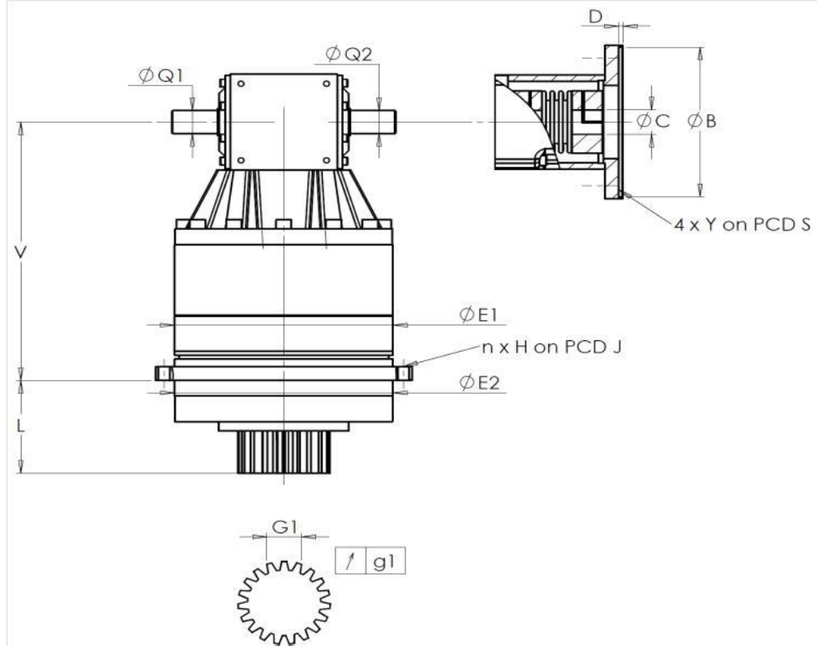

General tolerance: Js13	Cmm	Automatic / manual coordinate-measuring machine	µm	Micrometer	Cr	Calliper rule	Di	Dial indicator	Pg	Plug gauge

HOUSING						OUTPUT PINION						MOTOR FLANGE				
requirement					measure	requirement					measure	requirement				measure
					A3201						N622					-
	E1	212h7 $^{0}_{-0,046}$		µm	211.98	Span dimension over 4 teeth						Ø	B		µm	
	E2	200h7 $^{0}_{-0,046}$		µm	199.99		G1	44,27 $^{0}_{-0,03}$		Cmm	44.25	Ø	C		µm	
n x H on PCD J		12 Ø9 on PCD 233		Cr		↗	g1	0,022		Di	0,01		D		Cr	
				Cr	OK							Ø	S1		Cr	
	V	289		µm	289.33	No-load input torque						Ø	Y1		Pg	
	L	94		µm	93.98	Line 1					1,1 Nm					
Ø	Q1	25 $^{+0,009}_{-0,004}$		µm	25.009							Noise level				
Ø	Q2	25 $^{+0,009}_{-0,004}$		µm	25.009				Line		Stiffness	@2100 rpm input (dB(A))				71,5 *
						Torsional stiffness (Nm/arcmin)			1		243,75					
						Radial stiffness (N/µm)			1		467					

Date: 18/10/2017 **Visa:** J ONGANER

Version: A

REDEX

ZI-BP79
F45210 FERRIERES
www.redex.fr

Tel: +33 2 38 94 42 00
Fax: +33 2 38 94 42 99
Email: info@redex.fr