KRPX

Performance sheet — **RX183-007-D** — Page 1/2

CUSTOMER:	YE-JOON MTS CORP	**CUSTOMER ORDER REF:**	YOM1704-01 KIHEUNG
DISTRIBUTOR:		**REDEX ORDER REF:**	211778
DESIGNATION:	KRPX2+M.21.3.H.28/38	**SERIAL NUMBER:**	900378
CODE:	RX131478-11	**MOTOR FLANGE CODE:**	RX128581-01

For the installation, please refer to User Manual KRPX (182/010)

SPECIFIC REMARKS:

Product images are for illustrative purposes only.

REDEX
ZI-BP79
F45210 FERRIERES
www.redex.fr
Tel: +33 2 38 94 42 00
Fax: +33 2 38 94 42 99
Email: info@redex.fr

KRPX

Performance sheet — **RX183-007-D** — Page 2/2

EXTERNAL DIMENSIONS & INTERFACES: **SN:** 900378

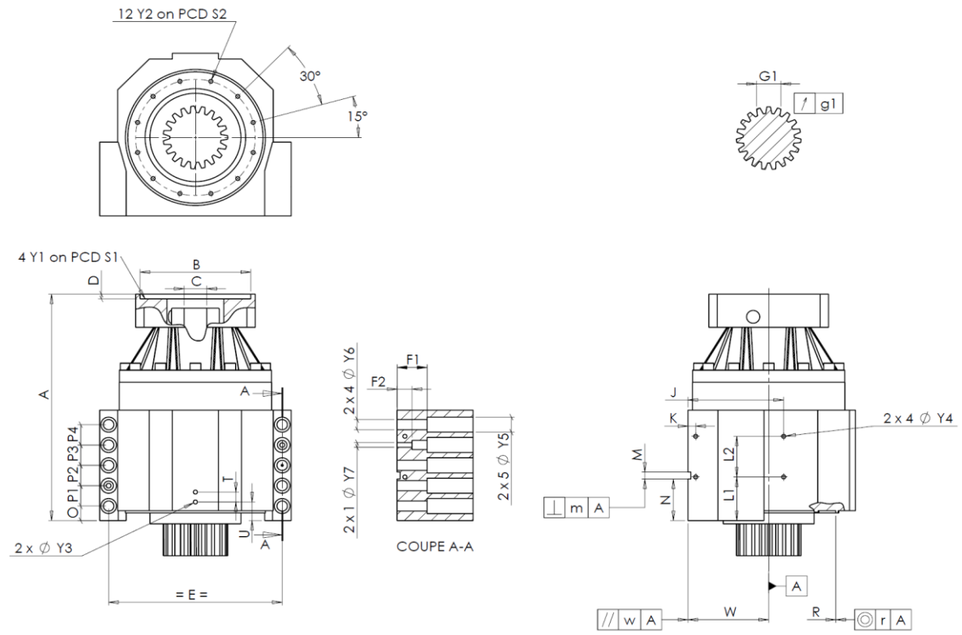

General tolerance: Js13 | *Cmm* Automatic / manual coordinate-measuring machine | *µm* Micrometer | *Cr* Calliper rule | *Di* Dial indicator | *Pg* Plug gauge

HOUSING requirement				HOUSING measure		HOUSING requirement				HOUSING measure		MOTOR FLANGE requirement				MOTOR FLANGE measure	
					A2758			L1	60		Cr	60					
		Y2	M6x12	Pg	OK			L2	60		Cr	60	Ø	B	181	µm	180.95
	Ø	S2	165 +0,1 -0,1	Cr	165			J	130		Cr	130	Ø	C	38 +0,05 +0,025	µm	38.05
		A	332	µm	332.88			K	11		Cr	11		D	8	Cr	8.54
		E	240	Cr	240		2 x 4Ø	Y4	M6x12		Pg	OK	Ø	S1	215	Cr	215
		O	15	Cr	15			F1	40		Cr	39.90	Ø	Y1	M12	Pg	OK
		P1	30	Cr	30			F2	24		Cr	24.3					
		P2	30	Cr	30		2 x 1Ø	Y7	10		µm	10	**No-load input torque**				
		P3	30	Cr	30		2 x 4Ø	Y6	15,5		µm	15.5	Line 1				0,5 Nm
		P4	30	Cr	30		2 x 5Ø	Y5	24		µm	24					
		T	14	Cr	14			M H6	10 +0,009 0		Cmm	10,009				**Line**	**Stiffness**
		U	26	Cr	26		⊥	m	0,05		Cmm	0,014	Torsional stiffness (Nm/arcmin)			1	243,75
	2 x 1Ø	Y3	M6x12	Pg	OK			N	55 +0,1 -0,1		Cmm	54,983					
		R	186 +0,2 +0,1	Cmm	186,182	A		W	110 +0,02 -0,02		Cmm	109,997	Radial stiffness (N/µm)			1	453
	◎	r	0,1	Cmm	0,029		//	w	0,03	/A	Cmm	0,003					

OUTPUT PINION						Noise level	
					N315	@2100 rpm input (dB(A))	66,5
Span dimension over 4 teeth							
		G1	44,27 0 -0,03	Cmm	44,25		
	↗	g1	0,022	Di	0,02		

Date: 30/06/2017 **Visa:** J ONGANER

Version: A

REDEX
ZI-BP79
F45210 FERRIERES
www.redex.fr
Tel: +33 2 38 94 42 00
Fax: +33 2 38 94 42 99
Email: info@redex.fr