KRP

PERFORMANCE SHEET	RX183-006-A	Page 1/2

CUSTOMER:	KUMING	CUSTOMER ORDER REF:	GC002274 KUMING
DISTRIBUTOR:	SHANGHAI GUDEL AUTOMATIO	REDEX ORDER REF:	211805
DESIGNATION:	KRP3+M.61.3.H.28/38	SERIAL NUMBER:	900332
CODE:	RX129016-32	MOTOR FLANGE CODE:	RX128581-01

For the installation, please refer to User Manual KRP (182/008)

SPECIFIC REMARKS:

Product images are for illustrative purposes only.

REDEX
ZI-BP79
F45210 FERRIERES
www.redex.fr
Tel: +33 2 38 94 42 00
Fax: +33 2 38 94 42 99
Email: info@redex.fr

KRP

PERFORMANCE SHEET	RX183-006-A	Page 2/2

EXTERNAL DIMENSIONS & INTERFACES: SN: 900332

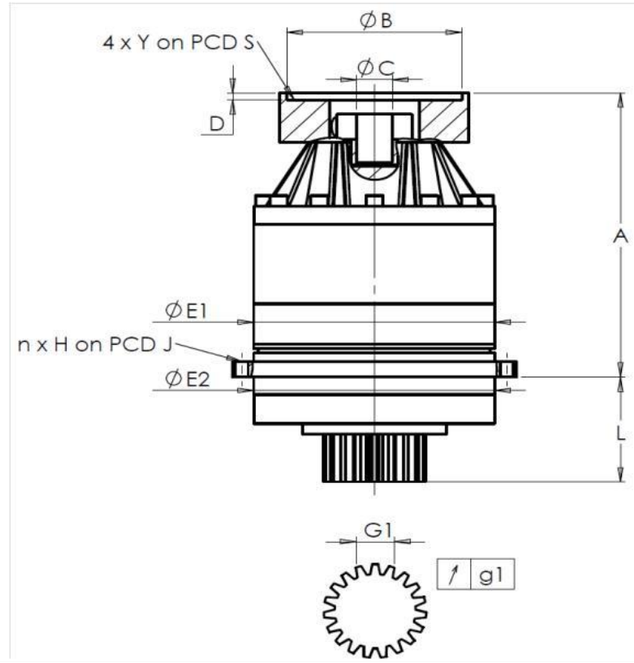

General tolerance: Js13	Cmm	Automatic / manual coordinate-measuring machine	µm	Micrometer	Cr	Calliper rule	Di	Dial indicator	Pg	Plug gauge

HOUSING

requirement				measure	
				M6754	
	E1	255h7 $^{0}_{-0,052}$	µm	255	
	E2	255h7 $^{0}_{-0,052}$	µm	255	
n x H on PCD J		16 Ø13,5 on PCD 280	Cr		
			Cr	OK	
	A	328,5	µm	329.4	
	L	121	µm	120.99	

OUTPUT PINION

requirement				measure	
				O2375	
Span dimension over 3 teeth					
	G1	39,25 $^{0}_{-0,03}$	Cmm	39,23	
↗	g1	0,022	Di	0,01	
No-load input torque					
Line 1				0,4 Nm	

MOTOR FLANGE

requirement				measure
Ø	B	181	µm	181
Ø	C	38 $^{+0,05}_{+0,025}$	µm	38.04
	D	8	Cr	8.59
Ø	S1	215	Cr	215
Ø	Y1	M12	Pg	OK

	Line	Stiffness
Torsional stiffness (Nm/arcmin)	1	473,03
Radial stiffness (N/µm)	1	1117

Noise level

@1600 rpm input (dB(A))	64,0

Date: 16/06/2017 **Visa:** J ONGANER

Version: A

REDEX
ZI-BP79
F45210 FERRIERES
www.redex.fr
Tel: +33 2 38 94 42 00
Fax: +33 2 38 94 42 99
Email: info@redex.fr