KRP

PERFORMANCE SHEET	RX183-006-A	Page 1/2

CUSTOMER:	FPT	**CUSTOMER ORDER REF:**	
DISTRIBUTOR:	ANDANTEX S.r.l	**REDEX ORDER REF:**	211670
DESIGNATION:	KRP2+M.21.3.H.28/38	**SERIAL NUMBER:**	900128
CODE:	RX128907-11	**MOTOR FLANGE CODE:**	

For the installation, please refer to User Manual KRP (182/008)

SPECIFIC REMARKS:

Product images are for illustrative purposes only.

REDEX
ZI-BP79
F45210 FERRIERES
www.redex.fr
Tel: +33 2 38 94 42 00
Fax: +33 2 38 94 42 99
Email: info@redex.fr

KRP

PERFORMANCE SHEET	RX183-006-A	Page 2/2

EXTERNAL DIMENSIONS & INTERFACES: **SN:** 900128

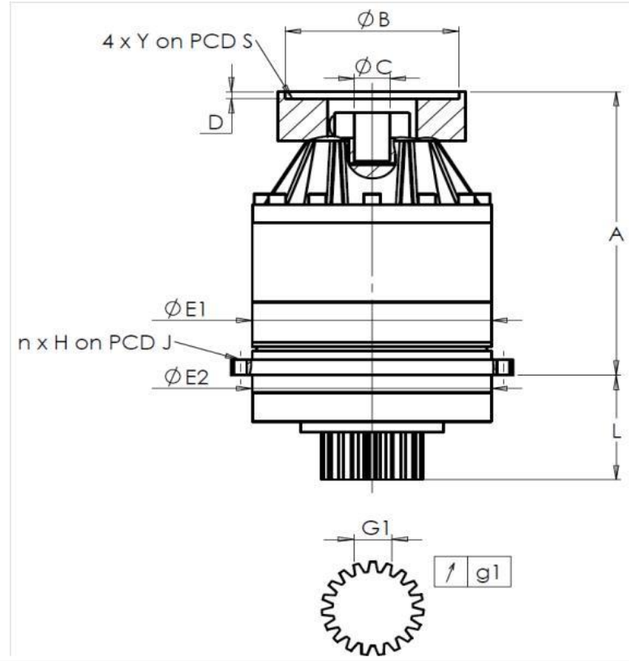

General tolerance: Js13	Cmm	Automatic / manual coordinate-measuring machine	µm	Micrometer	Cr	Calliper rule	Di	Dial indicator	Pg	Plug gauge

HOUSING

requirement					measure
					M8021
	E1	212h7 $^{0}_{-0,046}$		µm	211.98
	E2	200h7 $^{0}_{-0,046}$		µm	199.985
n x H on PCD J		12 Ø9 on PCD 233		Cr	
				Cr	OK
	A	288		µm	289.02
	L	94		µm	93.82

OUTPUT PINION

requirement				measure
				O2360
Span dimension over 4 teeth				
	G1	44,27 $^{0}_{-0,03}$	Cmm	44,26
↗	g1	0,022	Di	0,01
No-load input torque				
Line 1				0,5 Nm

	Line	Stiffness
Torsional stiffness (Nm/arcmin)	1	243,75
Radial stiffness (N/µm)	1	447

MOTOR FLANGE

requirement				measure
				-
Ø	B	181	µm	181
Ø	C	38	µm	38,04
	D	8	Cr	8,5
Ø	S1	215	Cr	215
Ø	Y1	4 M12	Pg	OK

Noise level

@2100 rpm input (dB(A))	66,0

Date: 25/04/2017 **Visa:** J ONGANER

Version: A

REDEX
ZI-BP79
F45210 FERRIERES
www.redex.fr
Tel: +33 2 38 94 42 00
Fax: +33 2 38 94 42 99
Email: info@redex.fr