KRP		Page
PERFORMANCE SHEET	RX183-006-A	1/2

CUSTOMER:	FPT	**CUSTOMER ORDER REF:**	
DISTRIBUTOR:	ANDANTEX S.r.l	**REDEX ORDER REF:**	211670
DESIGNATION:	KRP2+M.21.3.H.28/38	**SERIAL NUMBER:**	900126
CODE:	RX128907-11	**MOTOR FLANGE CODE:**	

For the installation, please refer to User Manual KRP (182/008)

SPECIFIC REMARKS:

Product images are for illustrative purposes only.

REDEX
ZI-BP79
F45210 FERRIERES
www.redex.fr
Tel: +33 2 38 94 42 00
Fax: +33 2 38 94 42 99
Email: info@redex.fr

KRP		Page
PERFORMANCE SHEET	RX183-006-A	2/2

EXTERNAL DIMENSIONS & INTERFACES: **SN:** 900126

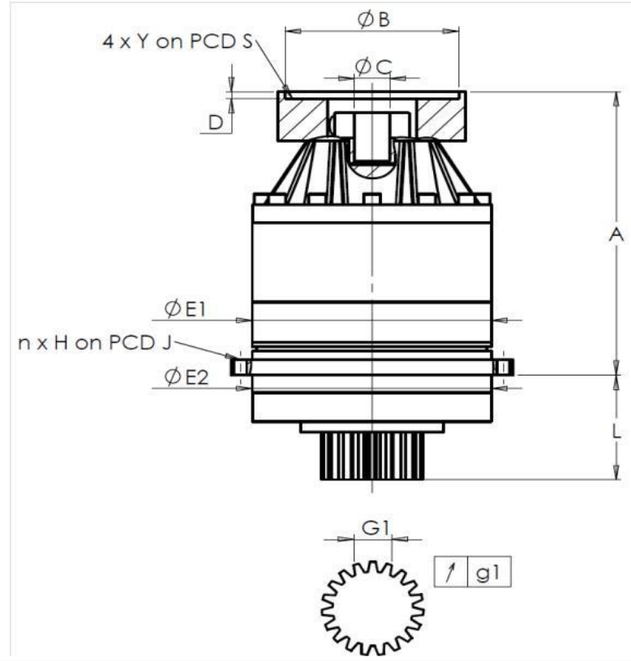

General tolerance: Js13	Cmm	Automatic / manual coordinate-measuring machine	µm	Micrometer	Cr	Calliper rule	Di	Dial indicator	Pg	Plug gauge

HOUSING

requirement				measure
				M8018
	E1	212h7 $^{0}_{-0,046}$	µm	211.98
	E2	200h7 $^{0}_{-0,046}$	µm	199.98
n x H on PCD J		12 Ø9 on PCD 233	Cr	
			Cr	OK
	A	288	µm	288.98
	L	94	µm	93.95

OUTPUT PINION

requirement				measure
				O2346
Span dimension over 4 teeth				
	G1	44,27 $^{0}_{-0,03}$	Cmm	44.255
↗	g1	0,022	Di	0,01
No-load input torque				
Line 1				0,5 Nm

	Line	Stiffness
Torsional stiffness (Nm/arcmin)	1	243,75
Radial stiffness (N/µm)	1	522

MOTOR FLANGE

requirement				measure
				-
Ø	B	181	µm	180.95
Ø	C	38F7 $^{+0,05}_{-0,025}$	µm	38.04
	D	8 $^{+1}_{0}$	Cr	8.54
Ø	S1	215	Cr	215
Ø	Y1	4 M12	Pg	OK

Noise level

@2100 rpm input (dB(A))	62,5

Date: 27/04/2017 **Visa:** J ONGANER

Version: A

REDEX
ZI-BP79
F45210 FERRIERES
www.redex.fr
Tel: +33 2 38 94 42 00
Fax: +33 2 38 94 42 99
Email: info@redex.fr