KRP		Page
PERFORMANCE SHEET	RX183-006-A	1/2

CUSTOMER:	FPT	CUSTOMER ORDER REF:	
DISTRIBUTOR:	ANDANTEX S.r.l	REDEX ORDER REF:	211670
DESIGNATION:	KRP2+M.21.3.H.28/38	SERIAL NUMBER:	900121
CODE:	RX128907-11	MOTOR FLANGE CODE:	

For the installation, please refer to User Manual KRP (182/008)

SPECIFIC REMARKS:

Product images are for illustrative purposes only.

REDEX
ZI-BP79
F45210 FERRIERES
www.redex.fr
Tel: +33 2 38 94 42 00
Fax: +33 2 38 94 42 99
Email: info@redex.fr

KRP		Page
PERFORMANCE SHEET	RX183-006-A	2/2

EXTERNAL DIMENSIONS & INTERFACES: **SN:** 900121

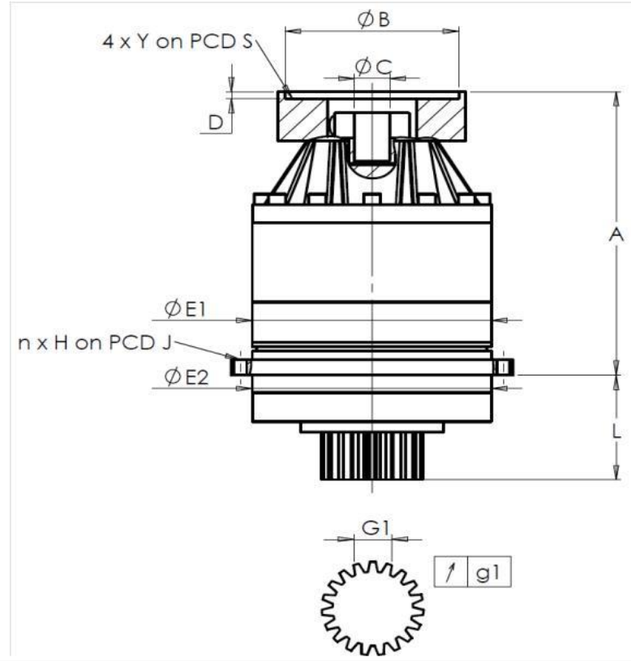

General tolerance: Js13	Cmm	Automatic / manual coordinate-measuring machine	µm	Micrometer	Cr	Calliper rule	Di	Dial indicator	Pg	Plug gauge

HOUSING						OUTPUT PINION					MOTOR FLANGE				
requirement					measure	requirement				measure	requirement				measure
					M8016					O2348					-
	E1	212h7 $^{0}_{-0,046}$		µm	211.985	Span dimension over 4 teeth					Ø	B	181	µm	181
	E2	200h7 $^{0}_{-0,046}$		µm	199.975		G1	44,27 $^{0}_{-0,03}$	Cmm	44,25	Ø	C	38	µm	38,04
n x H on PCD J		12 Ø9 on PCD 233		Cr		↗	g1	0,022	Di	0,005		D	8	Cr	8,5
				Cr	OK						Ø	S1	215	Cr	215
	A	288		µm	288.965	No-load input torque					Ø	Y1	4 M12	Pg	OK
	L	94		µm	93.96	Line 1				0,5 Nm					

	Line	Stiffness
Torsional stiffness (Nm/arcmin)	1	243,75
Radial stiffness (N/µm)	1	524

Noise level	
@2100 rpm input (dB(A))	67,0

Date: 24/04/2017 **Visa:** J ONGANER

Version: A

REDEX
ZI-BP79
F45210 FERRIERES
www.redex.fr
Tel: +33 2 38 94 42 00
Fax: +33 2 38 94 42 99
Email: info@redex.fr