KRPX

Performance sheet — **RX183-007-D** — Page 1/2

CUSTOMER:	MAKINO	**CUSTOMER ORDER REF:**	161208IB-1 MAKINO
DISTRIBUTOR:	S & F INC	**REDEX ORDER REF:**	211420
DESIGNATION:	KRPX4+M.21.3.H.35/48	**SERIAL NUMBER:**	899873
CODE:	RX131194-11	**MOTOR FLANGE CODE:**	RX128583-06

For the installation, please refer to User Manual KRPX (182/010)

SPECIFIC REMARKS:

Product images are for illustrative purposes only.

REDEX
ZI-BP79
F45210 FERRIERES
www.redex.fr
Tel: +33 2 38 94 42 00
Fax: +33 2 38 94 42 99
Email: info@redex.fr

KRPX

Performance sheet — **RX183-007-D** — Page 2/2

EXTERNAL DIMENSIONS & INTERFACES: **SN:** 899873

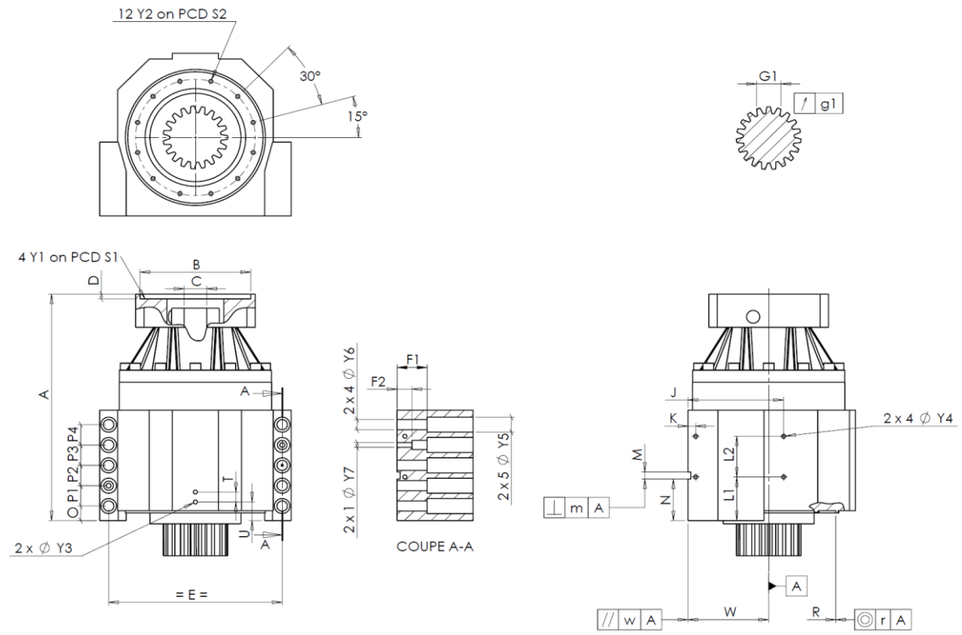

General tolerance: Js13 | *Cmm* Automatic / manual coordinate-measuring machine | *µm* Micrometer | *Cr* Calliper rule | *Di* Dial indicator | *Pg* Plug gauge

HOUSING requirement				HOUSING measure		HOUSING requirement				HOUSING measure		MOTOR FLANGE requirement				MOTOR FLANGE measure	
					M5432			L1	81	Cr	81						
		Y2	M8x16	Pg	OK			L2	79	Cr	79	Ø	B	115		µm	115
	Ø	S2	234 +0,1 -0,1	Cr	234			J	185	Cr	185	Ø	C	35 +0,05 +0,025		µm	35.04
		A	436	µm	437.4			K	15	Cr	15		D	8		Cr	8.52
		E	320	Cr	320		2 x 4Ø	Y4	M10x13	Pg	OK	Ø	S1	200		Cr	200
		O	20	Cr	20			F1	60	Cr	60.92	Ø	Y1	M12		Pg	OK
		P1	40	Cr	40			F2	30	Cr	30.42						
		P2	40	Cr	40		2 x 1Ø	Y7	14	µm	14	**No-load input torque**					
		P3	40	Cr	40		2 x 4Ø	Y6	22	µm	22	Line 1				1,7 Nm	
		P4	40	Cr	40		2 x 5Ø	Y5	33	µm	33						
		T	20	Cr	20			M H6	15 +0,011 0	Cmm	15,004				**Line**	**Stiffness**	
		U	37	Cr	37		⊥	m	0,05	Cmm	0,035	Torsional stiffness (Nm/arcmin)			1	574,81	
	2 x 1Ø	Y3	M10x13	Pg	OK			N	72,5 +0,1 -0,1	Cmm	72,503						
		R	255 +0,2 +0,1	Cmm	255,14	A		W	158 +0,035 -0,035	Cmm	158,004	Radial stiffness (N/µm)			1	981	
	◎	r	0,1	Cmm	0,008		//	w	0,03 /A	Cmm	0,01						

OUTPUT PINION					
					O2047
Span dimension over 3 teeth					
		G1	46,9 0 -0,03	Cmm	46.89
	↗	g1	0,022	Di	0,02

Noise level	
@1300 rpm input (dB(A))	62,0

Date: 20/02/2017 **Visa:** J ONGANER

Version: A

REDEX
ZI-BP79
F45210 FERRIERES
www.redex.fr
Tel: +33 2 38 94 42 00
Fax: +33 2 38 94 42 99
Email: info@redex.fr