KRP

PERFORMANCE SHEET	RX183-006-A	Page 1/2

CUSTOMER:	YONG JU PRECISION	**CUSTOMER ORDER REF:**	RX105306T YONG JU
DISTRIBUTOR:		**REDEX ORDER REF:**	210427
DESIGNATION:	KRP3+R.31.4.H	**SERIAL NUMBER:**	899715
CODE:	RX128565-12	**MOTOR FLANGE CODE:**	

For the installation, please refer to User Manual KRP (182/008)

SPECIFIC REMARKS:

Product images are for illustrative purposes only.

REDEX ANDANTEX

ZI-BP79
F45210 FERRIERES
www.redex.fr

Tel: +33 2 38 94 42 00
Fax: +33 2 38 94 42 99
Email: info@redex.fr

KRP

PERFORMANCE SHEET	RX183-006-A	Page 2/2

EXTERNAL DIMENSIONS & INTERFACES: **SN:** 899715

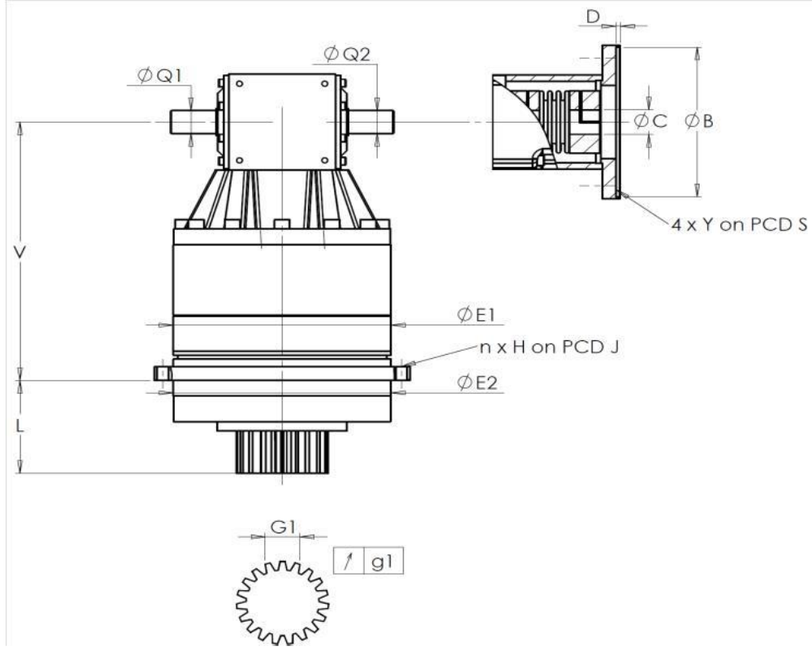

General tolerance: Js13	Cmm	Automatic / manual coordinate-measuring machine	µm	Micrometer	Cr	Calliper rule	Di	Dial indicator	Pg	Plug gauge

HOUSING

requirement					measure
					M1147
	E1	255h7 $^{0}_{-0,052}$		µm	254.97
	E2	255h7 $^{0}_{-0,052}$		µm	254.97
n x H on PCD J		16 Ø13,5 on PCD 280		Cr	
				Cr	OK
	V	337		µm	337.11
	L	121		µm	120.97
Ø	Q1	30 $^{+0,009}_{-0,004}$		µm	30.005
Ø	Q2	30 $^{+0,009}_{-0,004}$		µm	30.005

OUTPUT PINION

requirement				measure
				O1260
Span dimension over 3 teeth				
	G1	39,25 $^{0}_{-0,03}$	Cmm	39.235
↗	g1	0,022	Di	0,02
No-load input torque				
Line 1				1 Nm

	Line	Stiffness
Torsional stiffness (Nm/arcmin)	1	473,03
Radial stiffness (N/µm)	1	1122

MOTOR FLANGE

requirement				measure
				-
Ø	B		µm	
Ø	C		µm	
	D		Cr	
Ø	S1		Cr	
Ø	Y1		Pg	

Noise level

@1600 rpm input (dB(A))	70,0

Date: 05/01/2017 **Visa:** J ONGANER

Version: A

REDEX ANDANTEX

ZI-BP79
F45210 FERRIERES
www.redex.fr

Tel: +33 2 38 94 42 00
Fax: +33 2 38 94 42 99
Email: info@redex.fr