KRP		Page
PERFORMANCE SHEET	RX183-006-A	1/2

CUSTOMER:	YONG JU PRECISION	**CUSTOMER ORDER REF:**	RX105303T YONG JU
DISTRIBUTOR:		**REDEX ORDER REF:**	210424
DESIGNATION:	KRP3+R.31.4.H	**SERIAL NUMBER:**	899704
CODE:	RX128565-12	**MOTOR FLANGE CODE:**	

For the installation, please refer to User Manual KRP (182/008)

SPECIFIC REMARKS:

Product images are for illustrative purposes only.

REDEX ANDANTEX

ZI-BP79
F45210 FERRIERES
www.redex.fr

Tel: +33 2 38 94 42 00
Fax: +33 2 38 94 42 99
Email: info@redex.fr

KRP		Page
PERFORMANCE SHEET	RX183-006-A	2/2

EXTERNAL DIMENSIONS & INTERFACES: **SN:** 899704

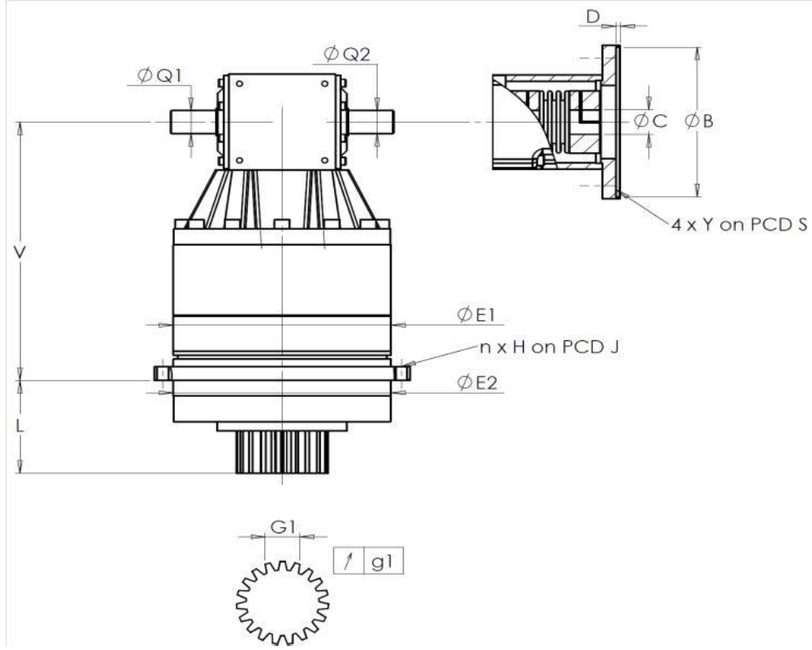

General tolerance: Js13	Cmm	Automatic / manual coordinate-measuring machine	µm	Micrometer	Cr	Calliper rule	Di	Dial indicator	Pg	Plug gauge

HOUSING

	requirement				measure
					M1174
		E1	255h7 $^{0}_{-0,052}$	µm	254.975
		E2	255h7 $^{0}_{-0,052}$	µm	255
	n x H on PCD J		16 Ø13,5 on PCD 280	Cr	
				Cr	OK
		V	337	µm	337.5
		L	121	µm	120.39
	Ø	Q1	30 $^{+0,009}_{-0,004}$	µm	30.005
	Ø	Q2	30 $^{+0,009}_{-0,004}$	µm	30.005

OUTPUT PINION

	requirement				measure
					O1242
	Span dimension over 3 teeth				
		G1	39,25 $^{0}_{-0,03}$	Cmm	39.23
	↗	g1	0,022	Di	0,005
	No-load input torque				
	Line 1				1,4 Nm

	Line	Stiffness
Torsional stiffness (Nm/arcmin)	1	473,03
Radial stiffness (N/µm)	1	990

MOTOR FLANGE

	requirement				measure
					-
	Ø	B		µm	
	Ø	C		µm	
		D		Cr	
	Ø	S1		Cr	
	Ø	Y1		Pg	

Noise level

@1600 rpm input (dB(A))	69,0

Date: 19/12/2016 **Visa:** J ONGANER

Version: A

REDEX ANDANTEX

ZI-BP79
F45210 FERRIERES
www.redex.fr

Tel: +33 2 38 94 42 00
Fax: +33 2 38 94 42 99
Email: info@redex.fr