KRPX

Performance sheet — **RX183-007-D** — Page 1/2

CUSTOMER:	BERTSCHE ENG.	**CUSTOMER ORDER REF:**	26529-00 BERTSCHE ENG.
DISTRIBUTOR:	ANDANTEX INCORPORATED	**REDEX ORDER REF:**	211051
DESIGNATION:	KRPX1+M.7.3.H.28/38	**SERIAL NUMBER:**	899513
CODE:	RX132765-02	**MOTOR FLANGE CODE:**	RX128581-02

For the installation, please refer to User Manual KRPX (182/010)

SPECIFIC REMARKS:

Product images are for illustrative purposes only.

REDEX ANDANTEX
ZI-BP79
F45210 FERRIERES
www.redex.fr
Tel: +33 2 38 94 42 00
Fax: +33 2 38 94 42 99
Email: info@redex.fr

KRPX

Performance sheet — **RX183-007-D** — Page 2/2

EXTERNAL DIMENSIONS & INTERFACES: **SN:** 899513

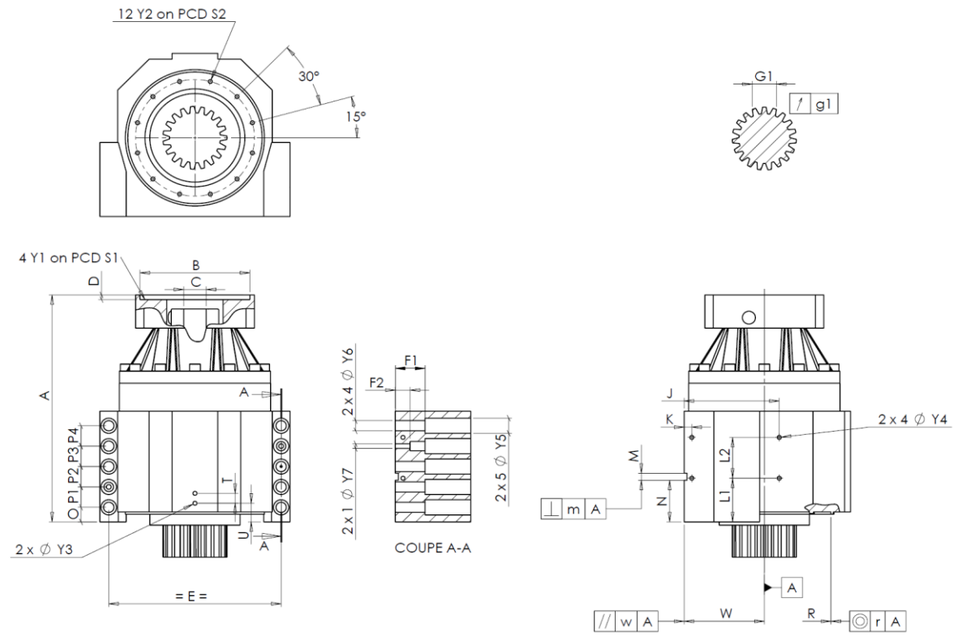

General tolerance: Js13 — *Cmm* Automatic / manual coordinate-measuring machine — *µm* Micrometer — *Cr* Calliper rule — *Di* Dial indicator — *Pg* Plug gauge

HOUSING requirement				HOUSING measure		HOUSING requirement				HOUSING measure		MOTOR FLANGE requirement				MOTOR FLANGE measure	
					L4630			L1	51		Cr	51					
		Y2	M6x12	Pg	OK			L2	48		Cr	48	Ø	B	115	µm	114.97
	Ø	S2	120 +0,1 -0,1	Cr	120			J	105		Cr	105	Ø	C	35 +0,05 +0,025	µm	35.03
		A	251	µm	251.95			K	11		Cr	11		D	8	Cr	8.5
		E	175	Cr	175		2 x 4Ø	Y4	M6x12		Pg	OK	Ø	S1	200	Cr	200
		O	15	Cr	15			F1	40		Cr	40.2	Ø	Y1	M12	Pg	OK
		P1	24	Cr	24			F2	24		Cr	23.6					
		P2	24	Cr	24		2 x 1Ø	Y7	10		µm	10					
		P3	24	Cr	24		2 x 4Ø	Y6	11		µm	11					
		P4	24	Cr	24		2 x 5Ø	Y5	18		µm	18					
		T	14	Cr	14			M H6	8 +0,009 0		Cmm	8					
		U	26	Cr	26		⊥	m	0,05		Cmm	0,013					
	2 x 1Ø	Y3	M6x12	Pg	OK			N	47 +0,1 -0,1		Cmm	46,99					
		R	135 +0,2 +0,1	Cmm	135,166	A		W	80 +0,02 -0,02		Cmm	80,006					
	◎	r	0,1	Cmm	0,054		//	w	0,03 /A		Cmm	0,006					

No-load input torque

Line 1	0,6 Nm

	Line	Stiffness
Torsional stiffness (Nm/arcmin)	1	81,39
Radial stiffness (N/µm)	1	313

OUTPUT PINION	
	O1388

Span dimension over 3 teeth

	G1	23,28 0 -0,03	Cmm	23.27
↗	g1	0,021	Di	0,01

Noise level	
@1600 rpm input (dB(A))	64,5

Date: 07/11/2016 **Visa:** J ONGANER

Version: A

REDEX ANDANTEX
ZI-BP79
F45210 FERRIERES
www.redex.fr
Tel: +33 2 38 94 42 00
Fax: +33 2 38 94 42 99
Email: info@redex.fr