KRP		Page
PERFORMANCE SHEET	RX183-006-A	1/2

CUSTOMER:	ARCO CHEER ENTERPRISE CO	CUSTOMER ORDER REF:	RX105317T ARCO CHEER ENTE
DISTRIBUTOR:		REDEX ORDER REF:	210940
DESIGNATION:	KRP2+R.21.4.H	SERIAL NUMBER:	899337
CODE:	RX128908-11	MOTOR FLANGE CODE:	

For the installation, please refer to User Manual KRP (182/008)

SPECIFIC REMARKS:

Product images are for illustrative purposes only.

REDEX ANDANTEX
ZI-BP79
F45210 FERRIERES
www.redex.fr
Tel: +33 2 38 94 42 00
Fax: +33 2 38 94 42 99
Email: info@redex.fr

KRP		Page
PERFORMANCE SHEET	RX183-006-A	2/2

EXTERNAL DIMENSIONS & INTERFACES: SN: 899337

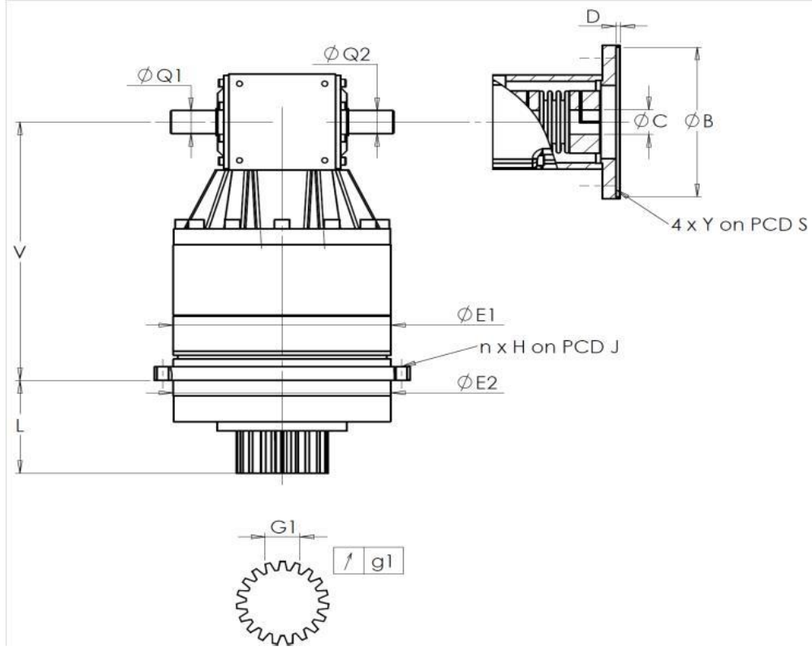

General tolerance: Js13	Cmm	Automatic / manual coordinate-measuring machine	µm	Micrometer	Cr	Calliper rule	Di	Dial indicator	Pg	Plug gauge

HOUSING

	requirement				measure
					M5394
		E1	212h7 $^{0}_{-0,046}$	µm	211.99
		E2	200h7 $^{0}_{-0,046}$	µm	199.98
	n x H on PCD J		12 Ø9 on PCD 233	Cr	
				Cr	OK
		V	289	µm	289.45
		L	94	µm	93.88
	Ø	Q1	25 $^{+0,009}_{-0,004}$	µm	25.009
	Ø	Q2	25 $^{+0,009}_{-0,004}$	µm	25.009

OUTPUT PINION

	requirement				measure
					O992
	Span dimension over 4 teeth				
		G1	44,27 $^{0}_{-0,03}$	Cmm	44.26
	↗	g1	0,022	Di	0,012
	No-load input torque				
	Line 1				0,5 Nm

	Line	Stiffness
Torsional stiffness (Nm/arcmin)	1	243,75
Radial stiffness (N/µm)	1	427

MOTOR FLANGE

	requirement				measure
					-
	Ø	B		µm	
	Ø	C		µm	
		D		Cr	
	Ø	S1		Cr	
	Ø	Y1		Pg	

Noise level

@2100 rpm input (dB(A))	73,0

Date: 20/10/2016 **Visa:** J ONGANER

Version: A

REDEX ANDANTEX
ZI-BP79
F45210 FERRIERES
www.redex.fr
Tel: +33 2 38 94 42 00
Fax: +33 2 38 94 42 99
Email: info@redex.fr