KRP		Page
PERFORMANCE SHEET	RX183-006-A	1/2

CUSTOMER:	ARCO CHEER ENTERPRISE CO	CUSTOMER ORDER REF:	RX105317T ARCO CHEER ENTE
DISTRIBUTOR:		REDEX ORDER REF:	210940
DESIGNATION:	KRP2+R.21.4.H	SERIAL NUMBER:	899336
CODE:	RX128908-11	MOTOR FLANGE CODE:	

For the installation, please refer to User Manual KRP (182/008)

SPECIFIC REMARKS:

Accepted according the derogation RX8644 *

Product images are for illustrative purposes only.

REDEX ANDANTEX

ZI-BP79
F45210 FERRIERES
www.redex.fr

Tel: +33 2 38 94 42 00
Fax: +33 2 38 94 42 99
Email: info@redex.fr

KRP		Page
PERFORMANCE SHEET	RX183-006-A	2/2

EXTERNAL DIMENSIONS & INTERFACES: **SN:** 899336

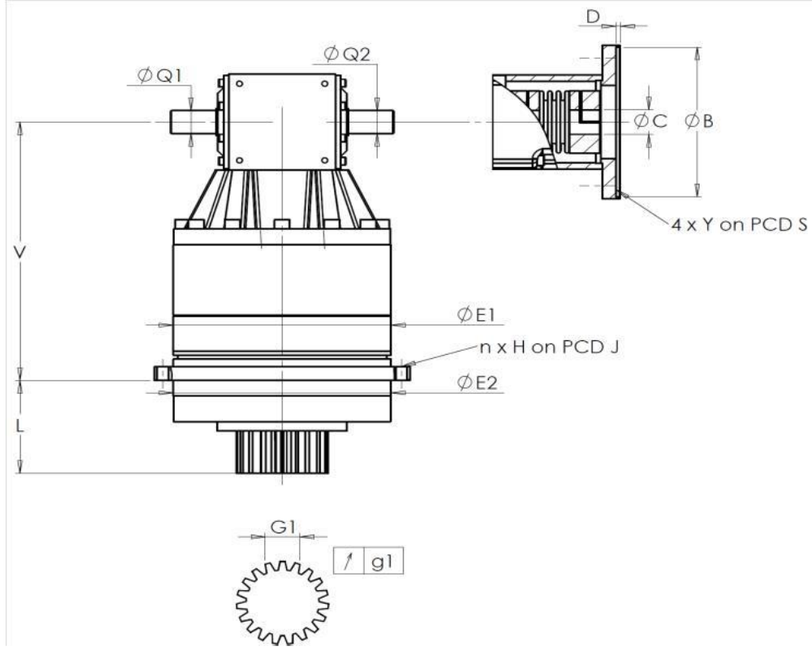

General tolerance: Js13	Cmm	Automatic / manual coordinate-measuring machine	µm	Micrometer	Cr	Calliper rule	Di	Dial indicator	Pg	Plug gauge

HOUSING						OUTPUT PINION					MOTOR FLANGE				
requirement					measure	requirement				measure	requirement				measure
					M5403					O971					-
	E1	212h7 $^{0}_{-0,046}$		µm	211.99	Span dimension over 4 teeth					Ø	B		µm	
	E2	200h7 $^{0}_{-0,046}$		µm	199.99		G1	44,27 $^{0}_{-0,03}$	Cmm	44.255	Ø	C		µm	
n x H on PCD J		12 Ø9 on PCD 233		Cr		↗	g1	0,022	Di	0,01		D		Cr	
				Cr	OK						Ø	S1		Cr	
	V	289		µm	289.3	No-load input torque					Ø	Y1		Pg	
	L	94		µm	93.9	Line 1				1,1 Nm					
Ø	Q1	25 $^{+0,009}_{-0,004}$		µm	25.005						Noise level				
Ø	Q2	25 $^{+0,009}_{-0,004}$		µm	25.005				Line	Stiffness	@2100 rpm input (dB(A))				74,5 *
						Torsional stiffness (Nm/arcmin)			1	243,75					
						Radial stiffness (N/µm)			1	534					

Date: 21/10/2016 **Visa:** J ONGANER

Version: A

REDEX ANDANTEX

ZI-BP79
F45210 FERRIERES
www.redex.fr

Tel: +33 2 38 94 42 00
Fax: +33 2 38 94 42 99
Email: info@redex.fr