| KRP | | Page |
|---|---|---|
| PERFORMANCE SHEET | RX183-006-A | 1/2 |

| | | | |
|---|---|---|---|
| CUSTOMER: | ARCO CHEER ENTERPRISE CO | CUSTOMER ORDER REF: | RX105317T ARCO CHEER ENTE |
| DISTRIBUTOR: | | REDEX ORDER REF: | 210940 |
| DESIGNATION: | KRP2+R.21.4.H | SERIAL NUMBER: | 899335 |
| CODE: | RX128908-11 | MOTOR FLANGE CODE: | |

**For the installation, please refer to User Manual KRP (182/008)**

**SPECIFIC REMARKS:**

**Accepted according the derogation RX8644 ***

Product images are for illustrative purposes only.


REDEX ANDANTEX

ZI-BP79
F45210 FERRIERES
www.redex.fr

Tel: +33 2 38 94 42 00
Fax: +33 2 38 94 42 99
Email: info@redex.fr


| KRP | | Page |
|---|---|---|
| PERFORMANCE SHEET | RX183-006-A | 2/2 |

**EXTERNAL DIMENSIONS & INTERFACES:** **SN:** 899335

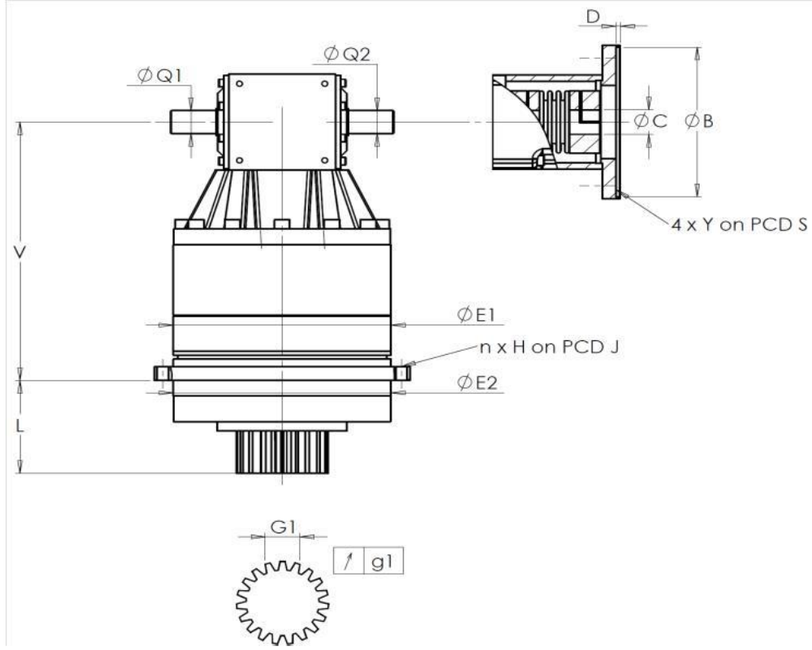


| General tolerance: Js13 | Cmm | Automatic / manual coordinate-measuring machine | µm | Micrometer | Cr | Calliper rule | Di | Dial indicator | Pg | Plug gauge |
|---|---|---|---|---|---|---|---|---|---|---|

| HOUSING | | | | | | OUTPUT PINION | | | | | MOTOR FLANGE | | | | |
|---|---|---|---|---|---|---|---|---|---|---|---|---|---|---|---|
| requirement | | | | | measure | requirement | | | | measure | requirement | | | | measure |
| | | | | | M5401 | | | | | O0994 | | | | | - |
| | E1 | 212h7 $^{0}_{-0,046}$ | | µm | 211.99 | Span dimension over 4 teeth | | | | | Ø | B | | µm | |
| | E2 | 200h7 $^{0}_{-0,046}$ | | µm | 199.99 | | G1 | 44,27 $^{0}_{-0,03}$ | Cmm | 44.26 | Ø | C | | µm | |
| n x H on PCD J | | 12 Ø9 on PCD 233 | | Cr | | ↗ | g1 | 0,022 | Di | 0,01 | | D | | Cr | |
| | | | | Cr | OK | | | | | | Ø | S1 | | Cr | |
| | V | 289 | | µm | 289.41 | No-load input torque | | | | | Ø | Y1 | | Pg | |
| | L | 94 | | µm | 93.83 | Line 1 | | | | 0,6 Nm | | | | | |
| Ø | Q1 | 25 $^{+0,009}_{-0,004}$ | | µm | 25.005 | | | | | | Noise level | | | | |
| Ø | Q2 | 25 $^{+0,009}_{-0,004}$ | | µm | 25.005 | | | | Line | Stiffness | @2100 rpm input (dB(A)) | | | | 73 * |
| | | | | | | Torsional stiffness (Nm/arcmin) | | | 1 | 243,75 | | | | | |
| | | | | | | Radial stiffness (N/µm) | | | 1 | 433 | | | | | |

**Date:** 21/10/2016 **Visa:** J ONGANER

**Version:** A


REDEX ANDANTEX

ZI-BP79
F45210 FERRIERES
www.redex.fr

Tel: +33 2 38 94 42 00
Fax: +33 2 38 94 42 99
Email: info@redex.fr