KRP

PERFORMANCE SHEET	RX183-006-A	Page 1/2

CUSTOMER:	ELECTROIMPACT	**CUSTOMER ORDER REF:**	24112-00 ELECTROIMPACT
DISTRIBUTOR:	ANDANTEX INCORPORATED	**REDEX ORDER REF:**	210720
DESIGNATION:	KRP2+R.91.4.S	**SERIAL NUMBER:**	899058
CODE:	RX129235-33	**MOTOR FLANGE CODE:**	RX129627-02

For the installation, please refer to User Manual KRP (182/008)

SPECIFIC REMARKS:

Product images are for illustrative purposes only.

REDEX ANDANTEX

ZI-BP79
F45210 FERRIERES
www.redex.fr

Tel: +33 2 38 94 42 00
Fax: +33 2 38 94 42 99
Email: info@redex.fr

KRP

PERFORMANCE SHEET	RX183-006-A	Page 2/2

EXTERNAL DIMENSIONS & INTERFACES: **SN:** 899058

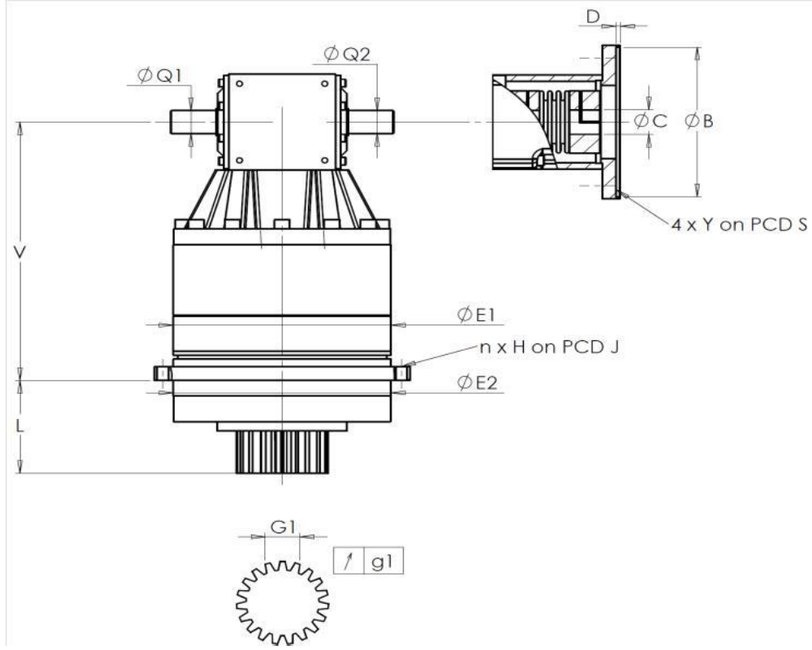

General tolerance: Js13	*Cmm* Automatic / manual coordinate-measuring machine	*µm* Micrometer	*Cr* Calliper rule	*Di* Dial indicator	*Pg* Plug gauge

HOUSING

	requirement				measure
					M2514
		E1	212h7 $^{0}_{-0,046}$	µm	211.98
		E2	200h7 $^{0}_{-0,046}$	µm	199.98
	n x H on PCD J		12 Ø9 on PCD 233	Cr	
				Cr	OK
		V	289	µm	289.35
		L	94	µm	93.92
	Ø	Q1	25 $^{+0,009}_{-0,004}$	µm	25.009
	Ø	Q2	25 $^{+0,009}_{-0,004}$	µm	25.009

OUTPUT PINION

	requirement				measure
					P2341
	Span dimension over 4 teeth				
		G1	44,27 $^{0}_{-0,03}$	Cmm	44,25
	↗	g1	0,022	Di	0,015
	No-load input torque				
	Line 1				0,5 Nm

	Line	Stiffness
Torsional stiffness (Nm/arcmin)	1	243,75
Radial stiffness (N/µm)	1	544

MOTOR FLANGE

	requirement				measure
Ø	B	114,3 $^{+0,047}_{+0,012}$	µm	/
Ø	C	35 $^{+0,05}_{+0,025}$	µm	/
	D	8	Cr	/
Ø	S1	200	Cr	/
Ø	Y1	M12	Pg	/

Noise level

@2100 rpm input (dB(A))	71,0

Date: 14/06/2016 **Visa:** J ONGANER

Version: A

REDEX ANDANTEX

ZI-BP79
F45210 FERRIERES
www.redex.fr

Tel: +33 2 38 94 42 00
Fax: +33 2 38 94 42 99
Email: info@redex.fr