KRP		Page
PERFORMANCE SHEET	RX183-006-A	1/2

CUSTOMER:	METALIMPEX	**CUSTOMER ORDER REF:**	ZD/R/001/01/16 METALIMPEX
DISTRIBUTOR:	GUEDEL SP Z.O.O	**REDEX ORDER REF:**	210445
DESIGNATION:	KRP4+R.91.4.H	**SERIAL NUMBER:**	898827
CODE:	RX129176-33	**MOTOR FLANGE CODE:**	

For the installation, please refer to User Manual KRP (182/008)

SPECIFIC REMARKS:

Product images are for illustrative purposes only.

REDEX ANDANTEX
ZI-BP79
F45210 FERRIERES
www.redex.fr
Tel: +33 2 38 94 42 00
Fax: +33 2 38 94 42 99
Email: info@redex.fr

KRP		Page
PERFORMANCE SHEET	RX183-006-A	2/2

EXTERNAL DIMENSIONS & INTERFACES: **SN:** 898827

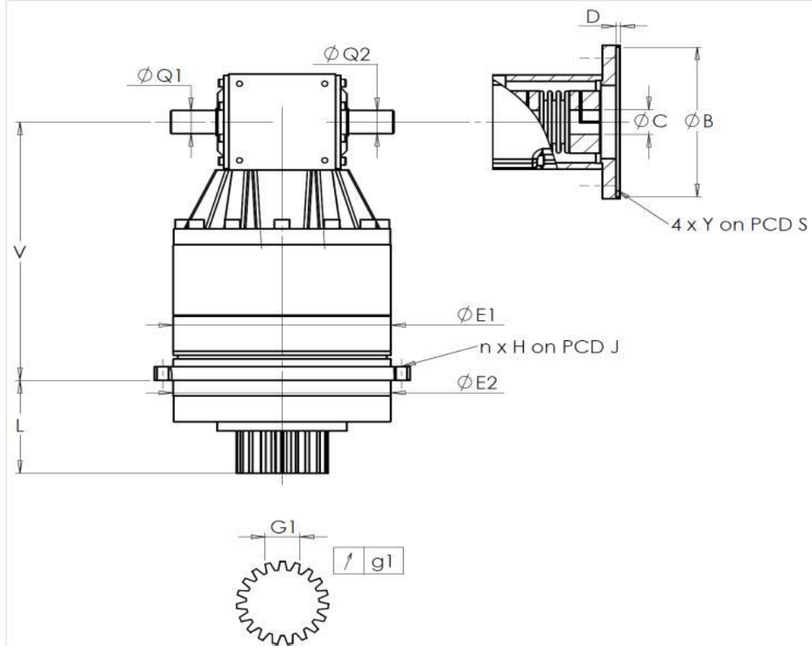

General tolerance: Js13	Cmm	Automatic / manual coordinate-measuring machine	µm	Micrometer	Cr	Calliper rule	Di	Dial indicator	Pg	Plug gauge

HOUSING

	requirement				measure
					K4598
		E1	285h7 $^{0}_{-0,052}$	µm	284.98
		E2	285h7 $^{0}_{-0,052}$	µm	284.975
	n x H on PCD J		16 Ø14 on PCD 310	Cr	
				Cr	OK
		V	414,3	µm	414.35
		L	141	µm	140.92
	Ø	Q1	35 $^{+0,011}_{-0,005}$	µm	35
	Ø	Q2	35 $^{+0,011}_{-0,005}$	µm	35

OUTPUT PINION

	requirement				measure
					P1390
	Span dimension over 3 teeth				
		G1	46,9 $^{0}_{-0,03}$	Cmm	46,885
	↗	g1	0,022	Di	0,01
	No-load input torque				
	Line 1				1,3 Nm

	Line	Stiffness
Torsional stiffness (Nm/arcmin)	1	574,81
Radial stiffness (N/µm)	1	1023

MOTOR FLANGE

	requirement				measure
					-
	Ø	B		µm	
	Ø	C		µm	
		D		Cr	
	Ø	S1		Cr	
	Ø	Y1		Pg	

Noise level

@1300 rpm input (dB(A))	61,5

Date: 22/04/2016 **Visa:** J ONGANER

Version: A

REDEX ANDANTEX
ZI-BP79
F45210 FERRIERES
www.redex.fr
Tel: +33 2 38 94 42 00
Fax: +33 2 38 94 42 99
Email: info@redex.fr