KRP

PERFORMANCE SHEET	RX183-006-A	Page 1/2

CUSTOMER:	YE-JOON MTS CORP	**CUSTOMER ORDER REF:**	YOM1602-01 HNK
DISTRIBUTOR:		**REDEX ORDER REF:**	210498
DESIGNATION:	KRP2+M.31.1.H.28/38	**SERIAL NUMBER:**	898808
CODE:	RX133014-12	**MOTOR FLANGE CODE:**	RX128581-01

For the installation, please refer to User Manual KRP (182/008)

SPECIFIC REMARKS:

Product images are for illustrative purposes only.

REDEX ANDANTEX

ZI-BP79
F45210 FERRIERES
www.redex.fr

Tel: +33 2 38 94 42 00
Fax: +33 2 38 94 42 99
Email: info@redex.fr

KRP

PERFORMANCE SHEET	RX183-006-A	Page 2/2

EXTERNAL DIMENSIONS & INTERFACES: **SN:** 898808

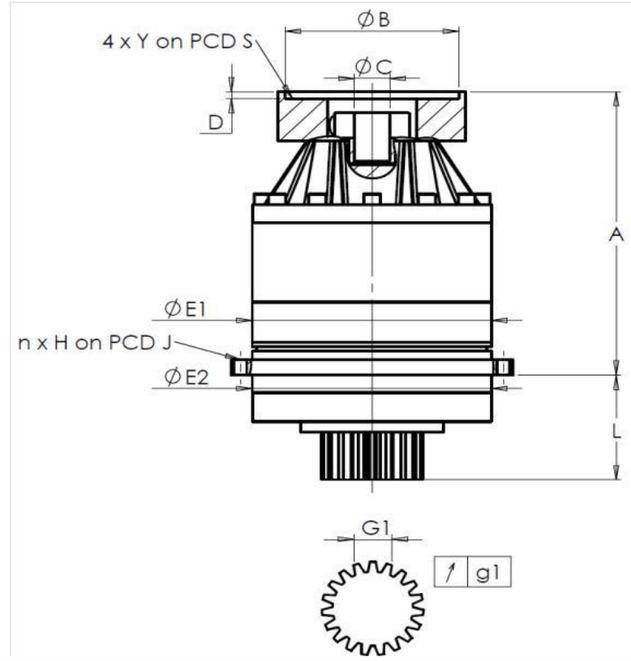

General tolerance: Js13	Cmm	Automatic / manual coordinate-measuring machine	µm	Micrometer	Cr	Calliper rule	Di	Dial indicator	Pg	Plug gauge

HOUSING

requirement					measure
					L6741
	E1	212h7 $^{0}_{-0,046}$		µm	211.985
	E2	200h7 $^{0}_{-0,046}$		µm	199.99
n x H on PCD J		12 Ø9 on PCD 233		Cr	
				Cr	OK
	A	288		µm	288.81
	L	94		µm	93.85

OUTPUT PINION

requirement				measure
				O134
Span dimension over 4 teeth				
	G1	44,27 $^{0}_{-0,03}$	Cmm	44,255
↗	g1	0,022	Di	0,01
No-load input torque				
Line 1				0,5 Nm

	Line	Stiffness
Torsional stiffness (Nm/arcmin)	1	243,75
Radial stiffness (N/µm)	1	540

MOTOR FLANGE

requirement				measure
Ø	B	181	µm	181.02
Ø	C	38 $^{+0,05}_{+0,025}$	µm	38.03
	D	8	Cr	8.53
Ø	S1	215	Cr	215
Ø	Y1	M12	Pg	OK

Noise level

@2100 rpm input (dB(A))	66,5

Date: 28/04/2016 **Visa:** J ONGANER

Version: A

REDEX ANDANTEX

ZI-BP79
F45210 FERRIERES
www.redex.fr

Tel: +33 2 38 94 42 00
Fax: +33 2 38 94 42 99
Email: info@redex.fr