KRP

PERFORMANCE SHEET	RX183-006-A	Page 1/2

CUSTOMER:	YE-JOON MTS CORP	**CUSTOMER ORDER REF:**	YOM1602-01 HNK
DISTRIBUTOR:		**REDEX ORDER REF:**	210498
DESIGNATION:	KRP2+M.31.1.H.28/38	**SERIAL NUMBER:**	898807
CODE:	RX133014-12	**MOTOR FLANGE CODE:**	RX128581-01

For the installation, please refer to User Manual KRP (182/008)

SPECIFIC REMARKS:

Product images are for illustrative purposes only.

REDEX ANDANTEX

ZI-BP79
F45210 FERRIERES
www.redex.fr

Tel: +33 2 38 94 42 00
Fax: +33 2 38 94 42 99
Email: info@redex.fr

KRP

PERFORMANCE SHEET	RX183-006-A	Page 2/2

EXTERNAL DIMENSIONS & INTERFACES: **SN:** 898807

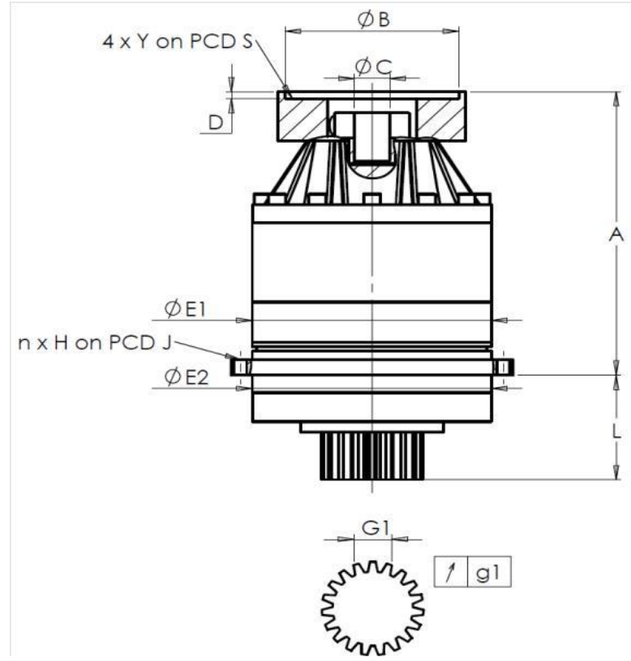

General tolerance: Js13 | *Cmm* Automatic / manual coordinate-measuring machine | *µm* Micrometer | *Cr* Calliper rule | *Di* Dial indicator | *Pg* Plug gauge

HOUSING requirement					HOUSING measure	OUTPUT PINION requirement				OUTPUT PINION measure	MOTOR FLANGE requirement				MOTOR FLANGE measure
					L6746					O127					
	E1	212h7 $^{0}_{-0,046}$	µm	211.975		Span dimension over 4 teeth					Ø	B	181	µm	181.06
	E2	200h7 $^{0}_{-0,046}$	µm	199.975			G1	44,27 $^{0}_{-0,03}$	Cmm	44,25	Ø	C	38 $^{+0,05}_{+0,025}$	µm	38.04
n x H on PCD J		12 Ø9 on PCD 233	Cr			↗	g1	0,022	Di	0,01		D	8	Cr	8.54
			Cr	OK							Ø	S1	215	Cr	215
	A	288	µm	288.85		No-load input torque					Ø	Y1	M12	Pg	OK
	L	94	µm	93.88		Line 1				0,6 Nm					

	Line	Stiffness
Torsional stiffness (Nm/arcmin)	1	243,75
Radial stiffness (N/µm)	1	514

Noise level	
@2100 rpm input (dB(A))	65,0

Date: 28/04/2016 **Visa:** J ONGANER

Version: A

REDEX ANDANTEX

ZI-BP79
F45210 FERRIERES
www.redex.fr

Tel: +33 2 38 94 42 00
Fax: +33 2 38 94 42 99
Email: info@redex.fr