# KRP

| PERFORMANCE SHEET | RX183-006-A | Page 1/2 |
|---|---|---|

| | | | |
|---|---|---|---|
| **CUSTOMER:** | YE-JOON MTS CORP | **CUSTOMER ORDER REF:** | YOM1602-01 HNK |
| **DISTRIBUTOR:** | | **REDEX ORDER REF:** | 210498 |
| **DESIGNATION:** | KRP2+M.21.3.H.28/38 | **SERIAL NUMBER:** | 898805 |
| **CODE:** | RX128907-11 | **MOTOR FLANGE CODE:** | RX129461-01 |

**For the installation, please refer to User Manual KRP (182/008)**

**SPECIFIC REMARKS:**

Product images are for illustrative purposes only.

REDEX ANDANTEX
ZI-BP79
F45210 FERRIERES
www.redex.fr
Tel: +33 2 38 94 42 00
Fax: +33 2 38 94 42 99
Email: info@redex.fr

# KRP

| PERFORMANCE SHEET | RX183-006-A | Page 2/2 |
|---|---|---|

**EXTERNAL DIMENSIONS & INTERFACES:** **SN:** 898805

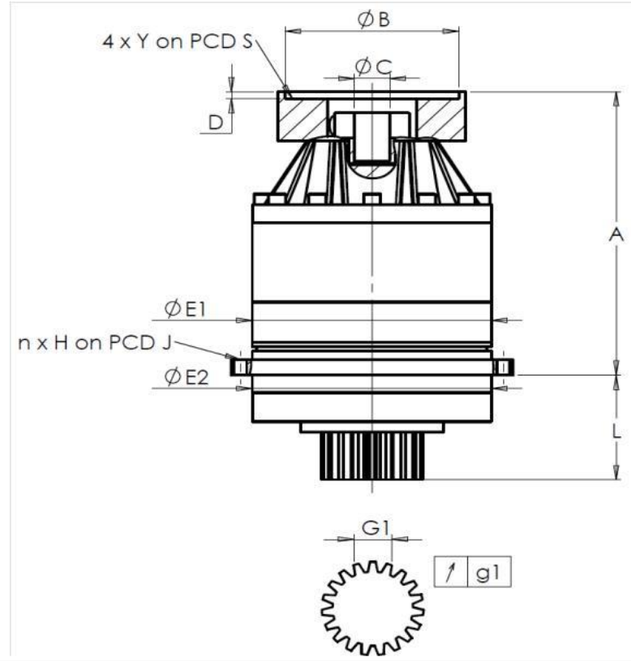


| General tolerance: Js13 | Cmm | Automatic / manual coordinate-measuring machine | µm | Micrometer | Cr | Calliper rule | Di | Dial indicator | Pg | Plug gauge |
|---|---|---|---|---|---|---|---|---|---|---|

**HOUSING**

| | requirement | | | | measure |
|---|---|---|---|---|---|
| | | | | | L6750 |
| | | E1 | 212h7 $^{0}_{-0,046}$ | µm | 211.98 |
| | | E2 | 200h7 $^{0}_{-0,046}$ | µm | 199.99 |
| | n x H on PCD J | | 12 Ø9 on PCD 233 | Cr | |
| | | | | Cr | OK |
| | | A | 273 | µm | 274.07 |
| | | L | 94 | µm | 93.79 |

**OUTPUT PINION**

| | requirement | | | | measure |
|---|---|---|---|---|---|
| | | | | | 119 |
| | **Span dimension over 4 teeth** | | | | |
| | | G1 | 44,27 $^{0}_{-0,03}$ | Cmm | 44,25 |
| | ↗ | g1 | 0,022 | Di | 0,015 |
| | **No-load input torque** | | | | |
| | Line 1 | | | | 0,5 Nm |

| | Line | Stiffness |
|---|---|---|
| Torsional stiffness (Nm/arcmin) | 1 | 243,75 |
| Radial stiffness (N/µm) | 1 | 545 |

**MOTOR FLANGE**

| | requirement | | | | measure |
|---|---|---|---|---|---|
| | | | | | |
| Ø | B | 131 | | µm | 130.95 |
| Ø | C | 32 $^{+0,05}_{+0,025}$ | | µm | 32.03 |
| | D | 5 | | Cr | 5.53 |
| Ø | S1 | 165 | | Cr | 165 |
| Ø | Y1 | M10 | | Pg | OK |

**Noise level**

| @2100 rpm input (dB(A)) | 63,0 |
|---|---|

**Date:** 28/04/2016 **Visa:** J ONGANER

**Version:** A

REDEX ANDANTEX
ZI-BP79
F45210 FERRIERES
www.redex.fr
Tel: +33 2 38 94 42 00
Fax: +33 2 38 94 42 99
Email: info@redex.fr