KRP

PERFORMANCE SHEET	RX183-006-A	Page 1/2

CUSTOMER:	YE-JOON MTS CORP	**CUSTOMER ORDER REF:**	YOM1602-01 HNK
DISTRIBUTOR:		**REDEX ORDER REF:**	210498
DESIGNATION:	KRP2+M.21.3.H.28/38	**SERIAL NUMBER:**	898804
CODE:	RX128907-11	**MOTOR FLANGE CODE:**	RX129461-01

For the installation, please refer to User Manual KRP (182/008)

SPECIFIC REMARKS:

Product images are for illustrative purposes only.

REDEX ANDANTEX
ZI-BP79
F45210 FERRIERES
www.redex.fr
Tel: +33 2 38 94 42 00
Fax: +33 2 38 94 42 99
Email: info@redex.fr

KRP

PERFORMANCE SHEET	RX183-006-A	Page 2/2

EXTERNAL DIMENSIONS & INTERFACES: **SN:** 898804

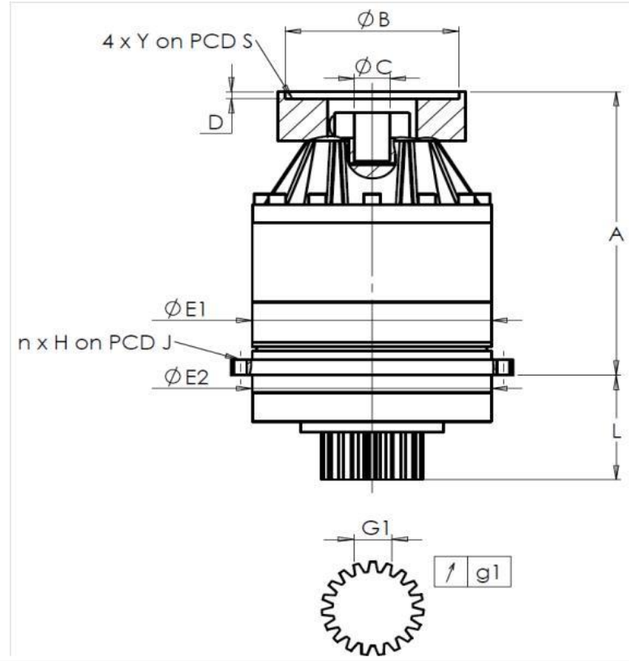

General tolerance: Js13	Cmm	Automatic / manual coordinate-measuring machine	µm	Micrometer	Cr	Calliper rule	Di	Dial indicator	Pg	Plug gauge

HOUSING

	requirement				measure
					L6743
		E1	212h7 $^{0}_{-0,046}$	µm	211.98
		E2	200h7 $^{0}_{-0,046}$	µm	199.97
	n x H on PCD J		12 Ø9 on PCD 233	Cr	
				Cr	OK
		A	273	µm	274.03
		L	94	µm	93.9

OUTPUT PINION

	requirement				measure
					123
	Span dimension over 4 teeth				
		G1	44,27 $^{0}_{-0,03}$	Cmm	44,255
	↗	g1	0,022	Di	0,015
	No-load input torque				
	Line 1				0,5 Nm

	Line	Stiffness
Torsional stiffness (Nm/arcmin)	1	243,75
Radial stiffness (N/µm)	1	460

MOTOR FLANGE

	requirement				measure
Ø	B	131		µm	130.9
Ø	C	32 $^{+0,05}_{+0,025}$		µm	32.035
	D	5		Cr	5.53
Ø	S1	165		Cr	165
Ø	Y1	M10		Pg	OK

Noise level

@2100 rpm input (dB(A))	63,0

Date: 28/04/2016 **Visa:** J ONGANER

Version: A

REDEX ANDANTEX
ZI-BP79
F45210 FERRIERES
www.redex.fr
Tel: +33 2 38 94 42 00
Fax: +33 2 38 94 42 99
Email: info@redex.fr