KRP

PERFORMANCE SHEET	RX183-006-A	Page 1/2

CUSTOMER:	YE-JOON MTS CORP	**CUSTOMER ORDER REF:**	YOM1602-01 HNK
DISTRIBUTOR:		**REDEX ORDER REF:**	210498
DESIGNATION:	KRP3+M.31.3.H.28/38	**SERIAL NUMBER:**	898801
CODE:	RX129016-12	**MOTOR FLANGE CODE:**	RX128581-01

For the installation, please refer to User Manual KRP (182/008)

SPECIFIC REMARKS:

Product images are for illustrative purposes only.

REDEX ANDANTEX

ZI-BP79
F45210 FERRIERES
www.redex.fr

Tel: +33 2 38 94 42 00
Fax: +33 2 38 94 42 99
Email: info@redex.fr

KRP

PERFORMANCE SHEET	RX183-006-A	Page 2/2

EXTERNAL DIMENSIONS & INTERFACES: **SN:** 898801

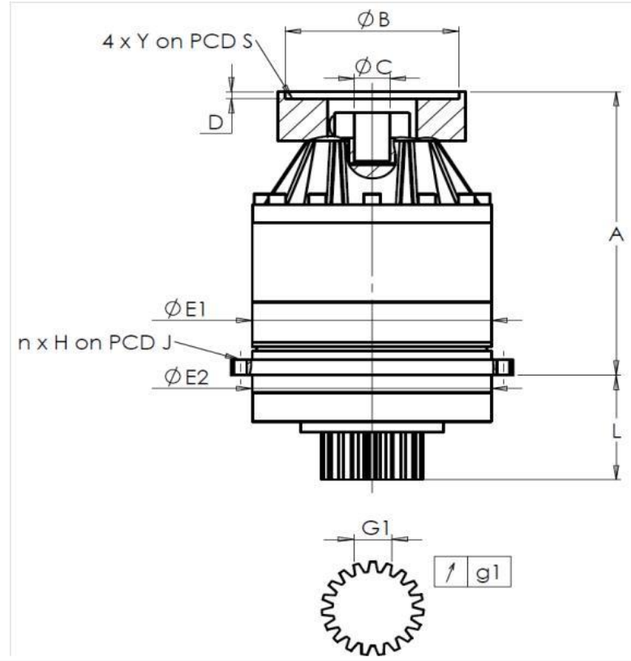

General tolerance: Js13 | *Cmm* Automatic / manual coordinate-measuring machine | *µm* Micrometer | *Cr* Calliper rule | *Di* Dial indicator | *Pg* Plug gauge

HOUSING

	requirement				measure
					L5099
	E1	255h7 $^{0}_{-0,052}$	µm		254,97
	E2	255h7 $^{0}_{-0,052}$	µm		254,98
	n x H on PCD J	16 Ø13,5 on PCD 280	Cr		16 Ø13,5 on Ø280
			Cr		
	A	328,5	µm		328,83
	L	121	µm		120,82

OUTPUT PINION

	requirement				measure
					O172
	Span dimension over 3 teeth				
	G1	39,25 $^{0}_{-0,03}$	Cmm		39,24
↗	g1	0,022	Di		0,01
	No-load input torque				
	Line 1				1 Nm

	Line	Stiffness
Torsional stiffness (Nm/arcmin)	1	473,03
Radial stiffness (N/µm)	1	896

MOTOR FLANGE

	requirement				measure
Ø	B	181	µm		181
Ø	C	38 $^{+0,05}_{+0,025}$	µm		38,03
	D	8	Cr		8,5
Ø	S1	215	Cr		215
Ø	Y1	M12	Pg		M12

Noise level

@1600 rpm input (dB(A))	64,5

Date: 29/04/2016 **Visa:** J ONGANER

Version: A

REDEX ANDANTEX

ZI-BP79
F45210 FERRIERES
www.redex.fr

Tel: +33 2 38 94 42 00
Fax: +33 2 38 94 42 99
Email: info@redex.fr