KRPX

Performance sheet — RX183-007-D

Page 1/2

CUSTOMER:	MACHINE TOOL & ELECTRONI	**CUSTOMER ORDER REF:**	25354 MACHINE TOOL & ELCTR
DISTRIBUTOR:	ANDANTEX INCORPORATED	**REDEX ORDER REF:**	210504
DESIGNATION:	KRPX4+R.91.4.H	**SERIAL NUMBER:**	898761
CODE:	RX131196-33	**MOTOR FLANGE CODE:**	RX129551-01

For the installation, please refer to User Manual KRPX (182/010)

SPECIFIC REMARKS:

Product images are for illustrative purposes only.

REDEX ANDANTEX

ZI-BP79
F45210 FERRIERES
www.redex.fr

Tel: +33 2 38 94 42 00
Fax: +33 2 38 94 42 99
Email: info@redex.fr

KRPX

Performance sheet — RX183-007-D

Page 2/2

EXTERNAL DIMENSIONS & INTERFACES: **SN:** 898761

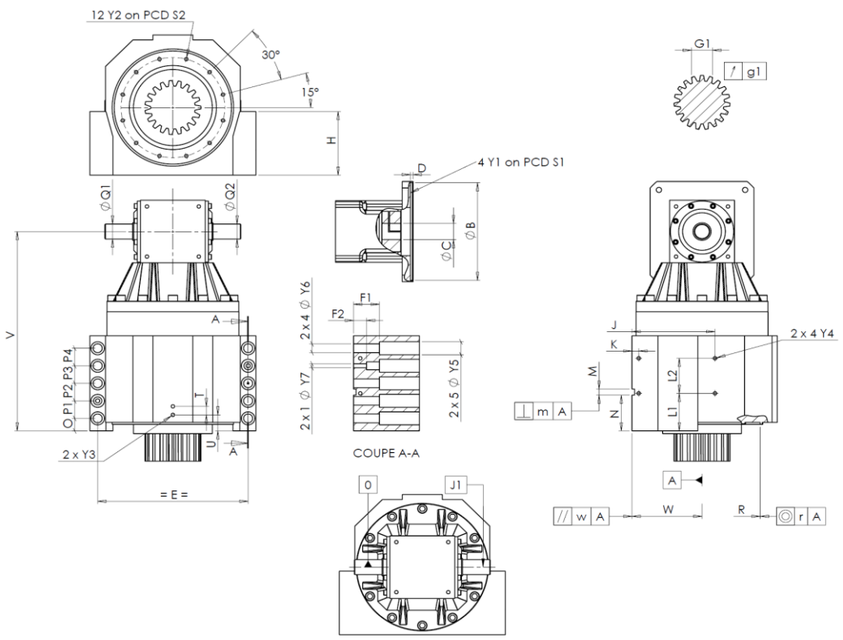

General tolerance: Js13 | Cmm: Automatic / manual coordinate-measuring machine | µm: Micrometer | Cr: Calliper rule | Di: Dial indicator | Pg: Plug gauge

HOUSING requirement					HOUSING measure	HOUSING requirement					HOUSING measure	MOTOR FLANGE requirement				MOTOR FLANGE measure
					L8211		L1	81		Cr	81					L2624
		Y2	M8x16	Pg	OK		L2	79		Cr	79	Ø	B	180 +0,054 +0,014	µm	180.02
	Ø	S2	234 +0,1 -0,1	Cr	234		J	185		Cr	185	Ø	C	38 +0,05 +0,025	µm	38.03
		V	477	µm	477.16		K	15		Cr	15		D	8	Cr	8.1
		E	320	Cr	320	2 x 4Ø	Y4	M10x13		Pg	OK	Ø	S1	215	Cr	215
		O	20	Cr	20		F1	60		Cr	60.67	Ø	Y1	M12	Pg	OK
		P1	40	Cr	40		F2	30		Cr	30.51					
		P2	40	Cr	40	2 x 1Ø	Y7	14		µm	14	**No-load input torque**				
		P3	40	Cr	40	2 x 4Ø	Y6	22		µm	22	Line 1				1,5 Nm
		P4	40	Cr	40	2 x 5Ø	Y5	33		µm	33					
		T	20	Cr	20		M H6	15 +0,011 0		Cmm	15				**Line**	**Stiffness**
		U	37	Cr	37	⊥	m	0,05		Cmm	0,012	Torsional stiffness (Nm/arcmin)			1	574,81
	2 x 1Ø	Y3	M10x13	Pg	OK		N	72,5 +0,1 -0,1		Cmm	72,515					
		R	255 +0,2 +0,1	Cmm	255,128	A	W	158 +0,035 -0,035		Cmm	157,992	Radial stiffness (N/µm)			1	1077
	◎	r	0,1	Cmm	0,038	//	w	0,03	/A	Cmm	0,003					
	Ø	Q1	35 +0,011 -0,005	µm	35											
	Ø	Q2	35 +0,011 -0,005	µm	35	**OUTPUT PINION**						**Noise level**				
		J1	/0	µm	0,02						P1388	@1300 rpm input (dB(A))				67,5
						Span dimension over 3 teeth										
							G1	46,9 0 -0,03		Cmm	46,885					
						↗	g1	0,022		Di	0,01					

Date: 28/04/2016 **Visa:** J ONGANER

Version: A

REDEX ANDANTEX

ZI-BP79
F45210 FERRIERES
www.redex.fr

Tel: +33 2 38 94 42 00
Fax: +33 2 38 94 42 99
Email: info@redex.fr