KRP

PERFORMANCE SHEET	RX183-006-A	Page 1/2

CUSTOMER:	ZCG	**CUSTOMER ORDER REF:**	GCN000589 ZCG
DISTRIBUTOR:	SHANGHAI GUDEL AUTOMATIO	**REDEX ORDER REF:**	210497
DESIGNATION:	KRP4+M.31.3.H.35/48	**SERIAL NUMBER:**	898719
CODE:	RX128414-12	**MOTOR FLANGE CODE:**	RX128583-01

For the installation, please refer to User Manual KRP (182/008)

SPECIFIC REMARKS:

Product images are for illustrative purposes only.

REDEX ANDANTEX

ZI-BP79
F45210 FERRIERES
www.redex.fr

Tel: +33 2 38 94 42 00
Fax: +33 2 38 94 42 99
Email: info@redex.fr

KRP

PERFORMANCE SHEET	RX183-006-A	Page 2/2

EXTERNAL DIMENSIONS & INTERFACES: **SN:** 898719

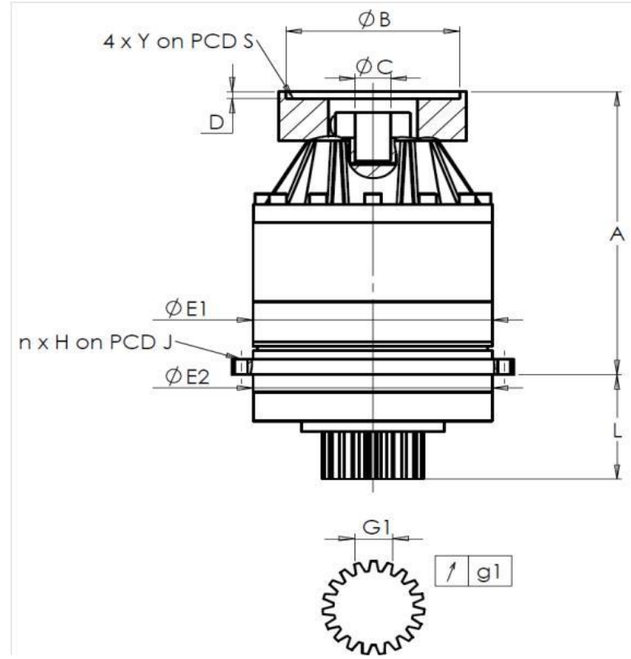

General tolerance: Js13	Cmm	Automatic / manual coordinate-measuring machine	µm	Micrometer	Cr	Calliper rule	Di	Dial indicator	Pg	Plug gauge

HOUSING

requirement				measure
				K4602
	E1	285h7 $^{0}_{-0,052}$	µm	284.97
	E2	285h7 $^{0}_{-0,052}$	µm	284.985
n x H on PCD J		16 Ø14 on PCD 310	Cr	
			Cr	OK
	A	373,5	µm	374.58
	L	141	µm	140.89

OUTPUT PINION

requirement				measure
				R2434
Span dimension over 3 teeth				
	G1	46,9 $^{0}_{-0,03}$	Cmm	46,89
↗	g1	0,022	Di	0,01
No-load input torque				
Line 1				1,2 Nm

	Line	Stiffness
Torsional stiffness (Nm/arcmin)	1	574,81
Radial stiffness (N/µm)	1	1137

MOTOR FLANGE

requirement				measure
Ø	B	181	µm	180.86
Ø	C	38 $^{+0,05}_{+0,025}$	µm	38.03
	D	8	Cr	8.48
Ø	S1	215	Cr	215
Ø	Y1	M12	Pg	M12

Noise level

@1300 rpm input (dB(A))	62,5

Date: 05/04/2016 **Visa:** JJ PELLE

Version: A

REDEX ANDANTEX

ZI-BP79
F45210 FERRIERES
www.redex.fr

Tel: +33 2 38 94 42 00
Fax: +33 2 38 94 42 99
Email: info@redex.fr