KRP

PERFORMANCE SHEET	RX183-006-A	Page 1/2

CUSTOMER:	ELECTROIMPACT	**CUSTOMER ORDER REF:**	25334 ELECTROIMPACT
DISTRIBUTOR:	ANDANTEX INCORPORATED	**REDEX ORDER REF:**	210479
DESIGNATION:	KRP1+R.31.4.H	**SERIAL NUMBER:**	898659
CODE:	RX129591-12	**MOTOR FLANGE CODE:**	

For the installation, please refer to User Manual KRP (182/008)

SPECIFIC REMARKS:

Product images are for illustrative purposes only.

REDEX ANDANTEX
ZI-BP79
F45210 FERRIERES
www.redex.fr
Tel: +33 2 38 94 42 00
Fax: +33 2 38 94 42 99
Email: info@redex.fr

KRP

PERFORMANCE SHEET	RX183-006-A	Page 2/2

EXTERNAL DIMENSIONS & INTERFACES: **SN:** 898659

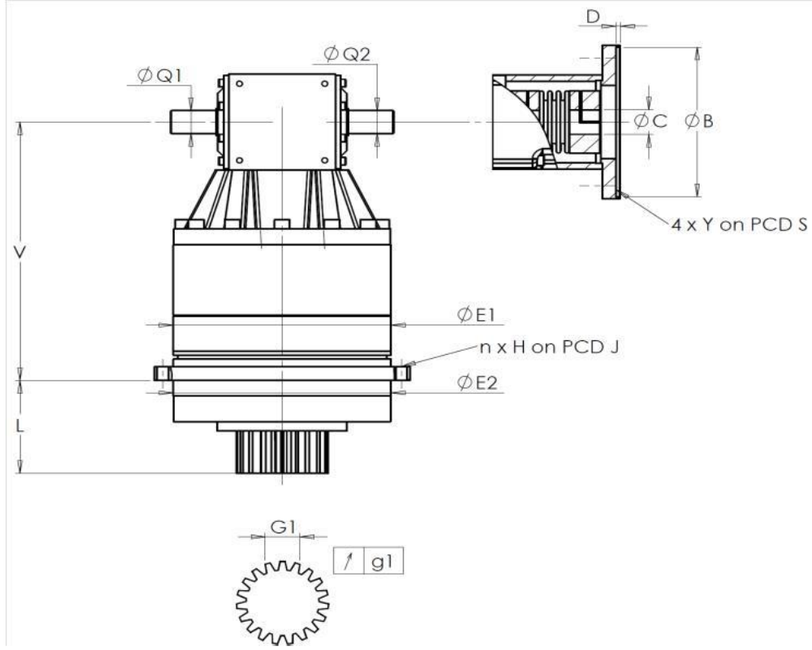

General tolerance: Js13	Cmm	Automatic / manual coordinate-measuring machine	µm	Micrometer	Cr	Calliper rule	Di	Dial indicator	Pg	Plug gauge

HOUSING

requirement					measure
					L6606
	E1	152h7 $^{0}_{-0,04}$	µm		151,98
	E2	140h7 $^{0}_{-0,04}$	µm		139,97
n x H on PCD J		12 Ø6,5 on PCD 168	Cr		12 Ø6,5 on PCD 168
			Cr		
	V	228,5	µm		228,5
	L	71	µm		70,91
Ø	Q1	20 $^{+0,009}_{-0,004}$	µm		20,005
Ø	Q2	20 $^{+0,009}_{-0,004}$	µm		20,005

OUTPUT PINION

requirement				measure
				P1545
Span dimension over 3 teeth				
	G1	23,28 $^{0}_{-0,03}$	Cmm	23,27
↗	g1	0,021	Di	0,01
No-load input torque				
Line 1				0,3 Nm

	Line	Stiffness
Torsional stiffness (Nm/arcmin)	1	81,39
Radial stiffness (N/µm)	1	390

MOTOR FLANGE

requirement				measure
				-
Ø	B		µm	
Ø	C		µm	
	D		Cr	
Ø	S1		Cr	
Ø	Y1		Pg	

Noise level

@2600 rpm input (dB(A))	69,0

Date: 11/04/2016 **Visa:** J ONGANER

Version: A

REDEX ANDANTEX
ZI-BP79
F45210 FERRIERES
www.redex.fr
Tel: +33 2 38 94 42 00
Fax: +33 2 38 94 42 99
Email: info@redex.fr