KRP

PERFORMANCE SHEET	RX183-006-A	Page 1/2

CUSTOMER:	YONG JU PRECISION TECHNOL	**CUSTOMER ORDER REF:**	RX105307T YONG JU
DISTRIBUTOR:		**REDEX ORDER REF:**	210489
DESIGNATION:	KRP2+R.31.4.H	**SERIAL NUMBER:**	898636
CODE:	RX128908-12	**MOTOR FLANGE CODE:**	

For the installation, please refer to User Manual KRP (182/008)

SPECIFIC REMARKS:

Product images are for illustrative purposes only.

REDEX ANDANTEX
ZI-BP79
F45210 FERRIERES
www.redex.fr
Tel: +33 2 38 94 42 00
Fax: +33 2 38 94 42 99
Email: info@redex.fr

KRP

PERFORMANCE SHEET	RX183-006-A	Page 2/2

EXTERNAL DIMENSIONS & INTERFACES: **SN:** 898636

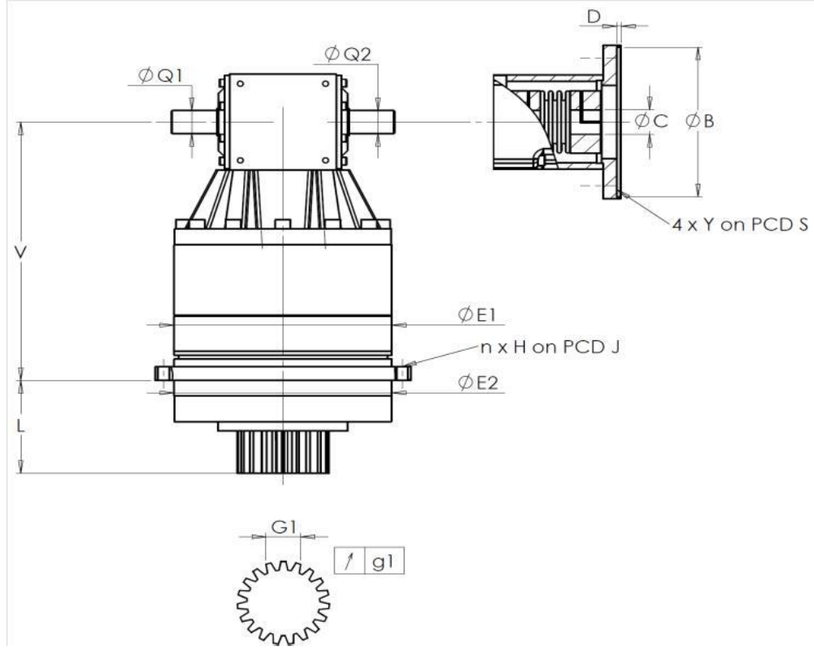

General tolerance: Js13	Cmm: Automatic / manual coordinate-measuring machine	µm: Micrometer	Cr: Calliper rule	Di: Dial indicator	Pg: Plug gauge

HOUSING

	requirement				measure
					L2054
		E1	212h7 $^{0}_{-0,046}$	µm	211.99
		E2	200h7 $^{0}_{-0,046}$	µm	199.96
	n x H on PCD J		12 Ø9 on PCD 233	Cr	
				Cr	OK
		V	289	µm	289.36
		L	94	µm	93.81
	Ø	Q1	25 $^{+0,009}_{-0,004}$	µm	25.005
	Ø	Q2	25 $^{+0,009}_{-0,004}$	µm	25.005

OUTPUT PINION

	requirement				measure
					P2015
	Span dimension over 4 teeth				
		G1	44,27 $^{0}_{-0,03}$	Cmm	44,26
	↗	g1	0,022	Di	0,02
	No-load input torque				
	Line 1				1 Nm

	Line	Stiffness
Torsional stiffness (Nm/arcmin)	1	243,75
Radial stiffness (N/µm)	1	485

MOTOR FLANGE

	requirement				measure
					-
	Ø	B		µm	
	Ø	C		µm	
		D		Cr	
	Ø	S1		Cr	
	Ø	Y1		Pg	

Noise level

@2100 rpm input (dB(A))	71,0

Date: 17/03/2016 **Visa:** JJ PELLE

Version: A

REDEX ANDANTEX
ZI-BP79
F45210 FERRIERES
www.redex.fr
Tel: +33 2 38 94 42 00
Fax: +33 2 38 94 42 99
Email: info@redex.fr