KRP		Page
PERFORMANCE SHEET	RX183-006-A	1/2

CUSTOMER:	LLC STANTEK	**CUSTOMER ORDER REF:**	CT-3815-05 LLC STANTEK
DISTRIBUTOR:		**REDEX ORDER REF:**	210306
DESIGNATION:	KRP5+R.91.4.H	**SERIAL NUMBER:**	898626
CODE:	RX133319-33	**MOTOR FLANGE CODE:**	RX129792-03

For the installation, please refer to User Manual KRP (182/008)

SPECIFIC REMARKS:

Product images are for illustrative purposes only.

REDEX ANDANTEX

ZI-BP79
F45210 FERRIERES
www.redex.fr

Tel: +33 2 38 94 42 00
Fax: +33 2 38 94 42 99
Email: info@redex.fr

KRP		Page
PERFORMANCE SHEET	RX183-006-A	2/2

EXTERNAL DIMENSIONS & INTERFACES: **SN:** 898626

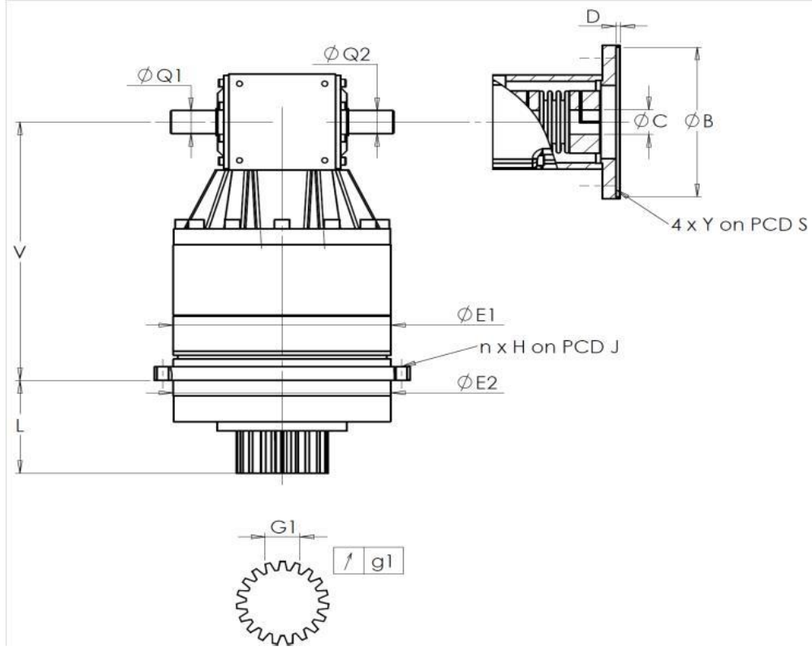

General tolerance: Js13	Cmm	Automatic / manual coordinate-measuring machine	µm	Micrometer	Cr	Calliper rule	Di	Dial indicator	Pg	Plug gauge

HOUSING

requirement					measure
					L8832
	E1	355j6 $^{+0,018}_{-0,018}$	µm		355
	E2	355j6 $^{+0,018}_{-0,018}$	µm		355,01
n x H on PCD J		12 Ø17,5 on PCD 385	Cr		
			Cr		OK
	V	491	µm		491,31
	L	178	µm		178,17
Ø	Q1	45 $^{+0,011}_{-0,005}$	µm		45
Ø	Q2	45 $^{+0,011}_{-0,005}$	µm		45

OUTPUT PINION

requirement				measure
				P1903
Span dimension over 3 teeth				
	G1	62,97 $^{0}_{-0,05}$	Cmm	62,95
↗	g1	0,03	Di	0,02
No-load input torque				
Line 1				1,8 Nm

	Line	Stiffness
Torsional stiffness (Nm/arcmin)	1	1076,47
Radial stiffness (N/µm)	1	1288

MOTOR FLANGE

requirement				measure
				L9030
Ø	B	195G7 $^{+0,061}_{+0,015}$	µm	195,03
Ø	C	45 F7 $^{+0,050}_{+0,025}$	µm	45,02
	D	20	Cr	20,1
Ø	S1	226,3	Cr	226,25
Ø	Y1	Ø13,5	Pg	OK

Noise level

@1000 rpm input (dB(A))	69,5

Date: 19/05/2016 **Visa:** J ONGANER

Version: A

REDEX ANDANTEX

ZI-BP79
F45210 FERRIERES
www.redex.fr

Tel: +33 2 38 94 42 00
Fax: +33 2 38 94 42 99
Email: info@redex.fr