KRP

PERFORMANCE SHEET	RX183-006-A	Page 1/2

CUSTOMER:	AWEA	**CUSTOMER ORDER REF:**	RX105309T AWEA
DISTRIBUTOR:	GUEDEL LINEARTEC	**REDEX ORDER REF:**	210464
DESIGNATION:	KRP3+R.46.4.H	**SERIAL NUMBER:**	898613
CODE:	RX128565-13	**MOTOR FLANGE CODE:**	

For the installation, please refer to User Manual KRP (182/008)

SPECIFIC REMARKS:

Product images are for illustrative purposes only.

REDEX ANDANTEX
ZI-BP79
F45210 FERRIERES
www.redex.fr
Tel: +33 2 38 94 42 00
Fax: +33 2 38 94 42 99
Email: info@redex.fr

KRP

PERFORMANCE SHEET	RX183-006-A	Page 2/2

EXTERNAL DIMENSIONS & INTERFACES: **SN:** 898613

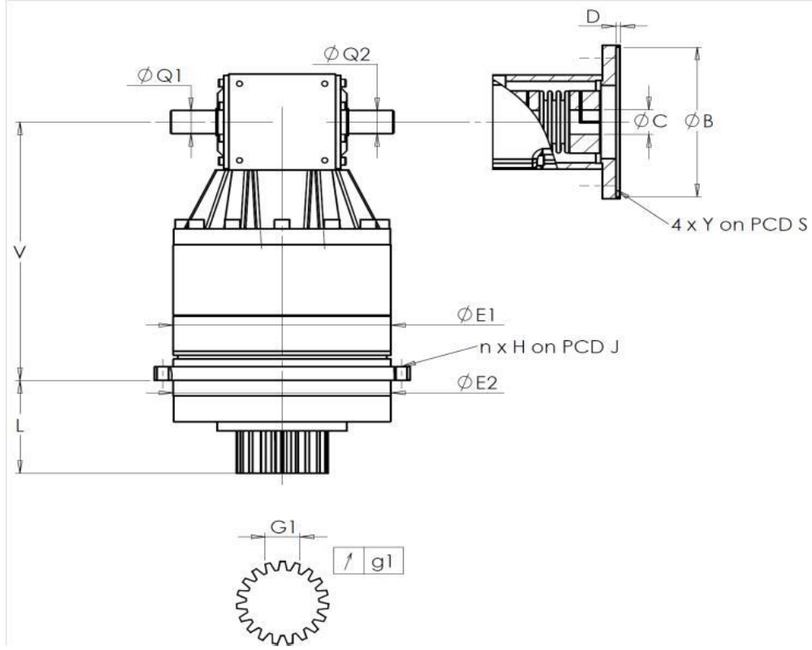

General tolerance: Js13	Cmm	Automatic / manual coordinate-measuring machine	µm	Micrometer	Cr	Calliper rule	Di	Dial indicator	Pg	Plug gauge

HOUSING						OUTPUT PINION					MOTOR FLANGE			
requirement					measure	requirement				measure	requirement			measure
					L5069					P2416				-
	E1	255h7 $^{0}_{-0,052}$		µm	254.97	Span dimension over 3 teeth					Ø	B		µm
	E2	255h7 $^{0}_{-0,052}$		µm	254.96		G1	39,25 $^{0}_{-0,03}$	Cmm	39,245	Ø	C		µm
n x H on PCD J		16 Ø13,5 on PCD 280		Cr		↗	g1	0,022	Di	0,01		D		Cr
				Cr	OK						Ø	S1		Cr
	V	337		µm	337.35	No-load input torque					Ø	Y1		Pg
	L	121		µm	121.05	Line 1				1 Nm				
Ø	Q1	30 $^{+0,009}_{-0,004}$		µm	30						Noise level			
Ø	Q2	30 $^{+0,009}_{-0,004}$		µm	30				Line	Stiffness	@1600 rpm input (dB(A))			71,5
						Torsional stiffness (Nm/arcmin)			1	473,03				
						Radial stiffness (N/µm)			1	1144				

Date: 31/03/2016 **Visa:** J ONGANER

Version: A

REDEX ANDANTEX
ZI-BP79
F45210 FERRIERES
www.redex.fr
Tel: +33 2 38 94 42 00
Fax: +33 2 38 94 42 99
Email: info@redex.fr