KRP

PERFORMANCE SHEET	RX183-006-A	Page 1/2

CUSTOMER:	ELECTROIMPACT	**CUSTOMER ORDER REF:**	25256 ELECTROIMPACT
DISTRIBUTOR:	ANDANTEX INCORPORATED	**REDEX ORDER REF:**	210367
DESIGNATION:	KRP3+R.61.4.H	**SERIAL NUMBER:**	898502
CODE:	RX128565-32	**MOTOR FLANGE CODE:**	RX129474-04

For the installation, please refer to User Manual KRP (182/008)

SPECIFIC REMARKS:

Product images are for illustrative purposes only.

REDEX ANDANTEX
ZI-BP79
F45210 FERRIERES
www.redex.fr
Tel: +33 2 38 94 42 00
Fax: +33 2 38 94 42 99
Email: info@redex.fr

KRP

PERFORMANCE SHEET	RX183-006-A	Page 2/2

EXTERNAL DIMENSIONS & INTERFACES: **SN:** 898502

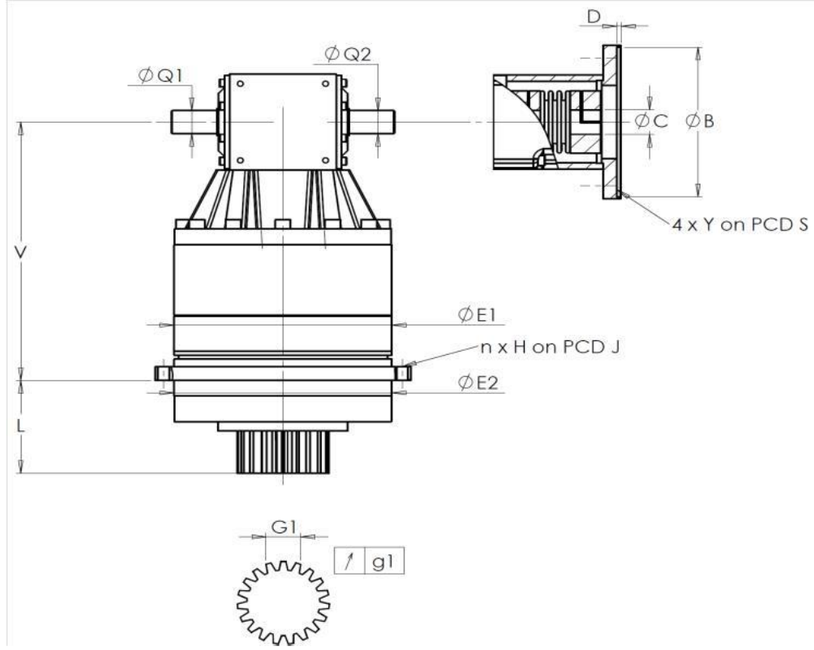

General tolerance: Js13	Cmm	Automatic / manual coordinate-measuring machine	µm	Micrometer	Cr	Calliper rule	Di	Dial indicator	Pg	Plug gauge

HOUSING

	requirement				measure
					K719
	E1	255h7 $^{0}_{-0,052}$	µm	254.97
	E2	255h7 $^{0}_{-0,052}$	µm	254.96
	n x H on PCD J	16 Ø13,5 on PCD 280	Cr	
			Cr	OK
	V	337	µm	337.35
	L	121	µm	121.1
Ø	Q1	30 $^{+0,009}_{-0,004}$	µm	30.005
Ø	Q2	30 $^{+0,009}_{-0,004}$	µm	30.005

OUTPUT PINION

	requirement				measure
					P1028
	Span dimension over 3 teeth				
	G1	39,25 $^{0}_{-0,03}$	Cmm		39.235
↗	g1	0,022	Di		0,01
	No-load input torque				
	Line 1				1,4 Nm

	Line	Stiffness
Torsional stiffness (Nm/arcmin)	1	473,03
Radial stiffness (N/µm)	1	1116

MOTOR FLANGE

	requirement				measure
					L4252
Ø	B	114,3 $^{+0,047}_{+0,012}$	µm		114.33
Ø	C	35 $^{+0,05}_{+0,025}$	µm		35.05
	D	8	Cr		8
Ø	S1	200	Cr		200
Ø	Y1	M12	Pg		OK

Noise level

@1600 rpm input (dB(A))	69,0

Date: 17/03/2016 **Visa:** JJ PELLE

Version: A

REDEX ANDANTEX
ZI-BP79
F45210 FERRIERES
www.redex.fr
Tel: +33 2 38 94 42 00
Fax: +33 2 38 94 42 99
Email: info@redex.fr