KRP

PERFORMANCE SHEET	RX183-006-A	Page 1/2

CUSTOMER:	ELECTROIMPACT	**CUSTOMER ORDER REF:**	25258 ELECTROIMPACT
DISTRIBUTOR:	ANDANTEX INCORPORATED	**REDEX ORDER REF:**	210368
DESIGNATION:	KRP4+M.7.3.H.60/75	**SERIAL NUMBER:**	898469
CODE:	RX128414-02	**MOTOR FLANGE CODE:**	RX129604-05

For the installation, please refer to User Manual KRP (182/008)

SPECIFIC REMARKS:

Product images are for illustrative purposes only.

REDEX ANDANTEX

ZI-BP79
F45210 FERRIERES
www.redex.fr

Tel: +33 2 38 94 42 00
Fax: +33 2 38 94 42 99
Email: info@redex.fr

KRP

PERFORMANCE SHEET	RX183-006-A	Page 2/2

EXTERNAL DIMENSIONS & INTERFACES: **SN:** 898469

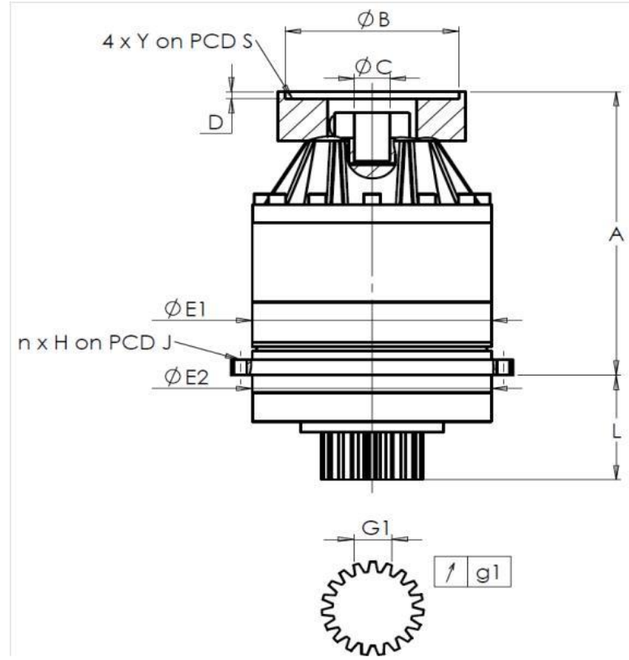

General tolerance: Js13	Cmm	Automatic / manual coordinate-measuring machine	µm	Micrometer	Cr	Calliper rule	Di	Dial indicator	Pg	Plug gauge

HOUSING

requirement					measure
					J3645
	E1	285h7 $^{0}_{-0,052}$		µm	284.96
	E2	285h7 $^{0}_{-0,052}$		µm	284.97
n x H on PCD J		16 Ø14 on PCD 310		Cr	
				Cr	OK
	A	383		µm	383.9
	L	141		µm	140.97

OUTPUT PINION

requirement				measure
				R1802
Span dimension over 3 teeth				
	G1	46,9 $^{0}_{-0,03}$	Cmm	46,88
↗	g1	0,022	Di	0,02
No-load input torque				
Line 1				3,5 Nm

	Line	Stiffness
Torsional stiffness (Nm/arcmin)	1	574,81
Radial stiffness (N/µm)	1	1224

MOTOR FLANGE

requirement				measure
Ø	B	251	µm	251.1
Ø	C	T65	µm	OK
	D	8	Cr	8.29
Ø	S1	300	Cr	300
Ø	Y1	M16	Pg	OK

Noise level

@800 rpm input (dB(A))	67,5

Date: 16/02/2016 **Visa:** J ONGANER

Version: A

REDEX ANDANTEX

ZI-BP79
F45210 FERRIERES
www.redex.fr

Tel: +33 2 38 94 42 00
Fax: +33 2 38 94 42 99
Email: info@redex.fr