KRP

PERFORMANCE SHEET	RX183-006-A	Page 1/2

CUSTOMER:	PHOENIX	**CUSTOMER ORDER REF:**	PHOENIX
DISTRIBUTOR:	ANDANTEX INCORPORATED	**REDEX ORDER REF:**	210343
DESIGNATION:	KRP1+M.31.3.H.22/32	**SERIAL NUMBER:**	898447
CODE:	RX129833-12	**MOTOR FLANGE CODE:**	RX129745-05

For the installation, please refer to User Manual KRP (182/008)

SPECIFIC REMARKS:

Product images are for illustrative purposes only.

REDEX ANDANTEX

ZI-BP79
F45210 FERRIERES
www.redex.fr

Tel: +33 2 38 94 42 00
Fax: +33 2 38 94 42 99
Email: info@redex.fr

KRP

PERFORMANCE SHEET	RX183-006-A	Page 2/2

EXTERNAL DIMENSIONS & INTERFACES: **SN:** 898447

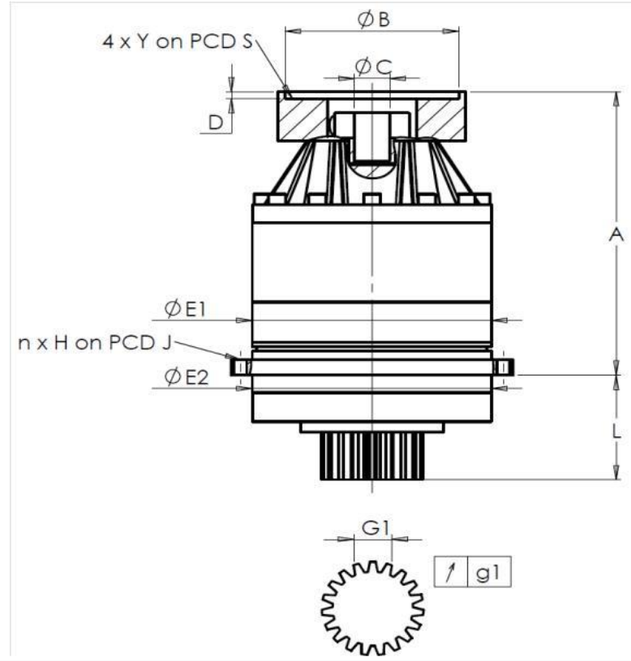

General tolerance: Js13	Cmm	Automatic / manual coordinate-measuring machine	µm	Micrometer	Cr	Calliper rule	Di	Dial indicator	Pg	Plug gauge

HOUSING

requirement					measure
					L0812
	E1	152h7 $^{0}_{-0,04}$	µm		151.98
	E2	140h7 $^{0}_{-0,04}$	µm		139.98
n x H on PCD J		12 Ø6,5 on PCD 168	Cr		
			Cr		OK
	A	224,5	µm		224.73
	L	71	µm		70.93

OUTPUT PINION

requirement				measure
				Q2896
Span dimension over 3 teeth				
	G1	23,28 $^{0}_{-0,03}$	Cmm	23.25
↗	g1	0,021	Di	0,005
No-load input torque				
Line 1				0,3 Nm

	Line	Stiffness
Torsional stiffness (Nm/arcmin)	1	81,39
Radial stiffness (N/µm)	1	311

MOTOR FLANGE

requirement				measure
Ø	B	181	µm	181.05
Ø	C	28F7 $^{+0,050}_{+0,025}$	µm	28.05
	D	8	Cr	8.5
Ø	S1	215	Cr	215
Ø	Y1	M14	Pg	OK

Noise level

@2600 rpm input (dB(A))	63,5

Date: 24/12/2015 **Visa:** J ONGANER

Version: A

REDEX ANDANTEX

ZI-BP79
F45210 FERRIERES
www.redex.fr

Tel: +33 2 38 94 42 00
Fax: +33 2 38 94 42 99
Email: info@redex.fr