KRP

PERFORMANCE SHEET	RX183-006-A	Page 1/2

CUSTOMER:	BAOSTEEL	**CUSTOMER ORDER REF:**	GCL000278 BAOSTEEL
DISTRIBUTOR:	SHANGHAI GUDEL AUTOMATIO	**REDEX ORDER REF:**	210159
DESIGNATION:	KRP2+R.31.4.S	**SERIAL NUMBER:**	898261
CODE:	RX129235-12	**MOTOR FLANGE CODE:**	

For the installation, please refer to User Manual KRP (182/008)

SPECIFIC REMARKS:

Product images are for illustrative purposes only.

REDEX ANDANTEX

ZI-BP79
F45210 FERRIERES
www.redex.fr

Tel: +33 2 38 94 42 00
Fax: +33 2 38 94 42 99
Email: info@redex.fr

KRP

PERFORMANCE SHEET	RX183-006-A	Page 2/2

EXTERNAL DIMENSIONS & INTERFACES: **SN:** 898261

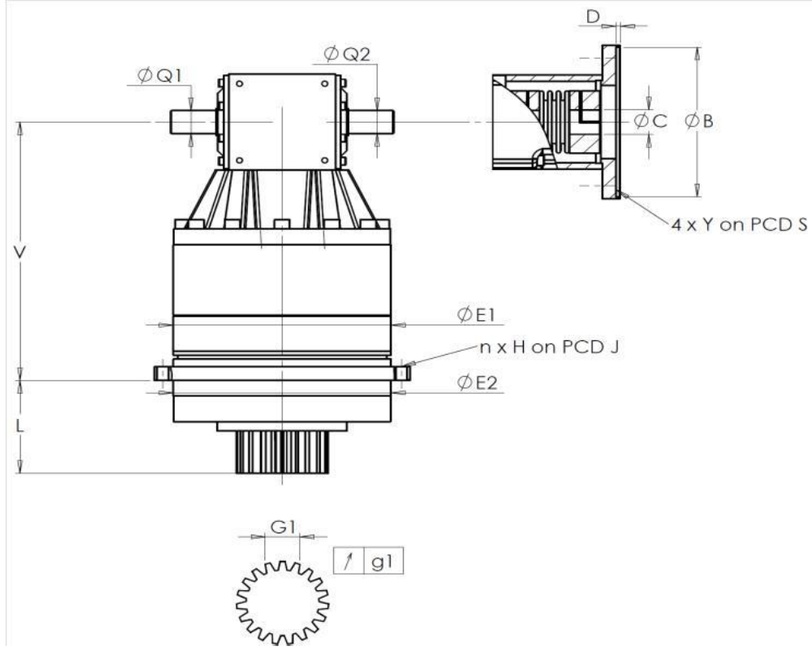

General tolerance: Js13	Cmm	Automatic / manual coordinate-measuring machine	µm	Micrometer	Cr	Calliper rule	Di	Dial indicator	Pg	Plug gauge

HOUSING requirement					HOUSING measure	OUTPUT PINION requirement				OUTPUT PINION measure	MOTOR FLANGE requirement				MOTOR FLANGE measure
					L4764					Q1665					-
	E1	212h7 $^{0}_{-0,046}$	µm	211.98		Span dimension over 4 teeth					Ø	B		µm	
	E2	200h7 $^{0}_{-0,046}$	µm	199.98			G1	44,27 $^{0}_{-0,03}$	Cmm	44,26	Ø	C		µm	
n x H on PCD J		12 Ø9 on PCD 233	Cr			↗	g1	0,022	Di	0,005		D		Cr	
			Cr	OK							Ø	S1		Cr	
	V	289	µm	289.36		No-load input torque					Ø	Y1		Pg	
	L	94	µm	93.91		Line 1				1 Nm					
Ø	Q1	25 $^{+0,009}_{-0,004}$	µm	25							Noise level				
Ø	Q2	25 $^{+0,009}_{-0,004}$	µm	25					Line	Stiffness	@2100 rpm input (dB(A))				71,0
						Torsional stiffness (Nm/arcmin)			1	243,75					
						Radial stiffness (N/µm)			1	498					

Date: 24/12/2015 **Visa:** J ONGANER

Version: A

REDEX ANDANTEX

ZI-BP79
F45210 FERRIERES
www.redex.fr

Tel: +33 2 38 94 42 00
Fax: +33 2 38 94 42 99
Email: info@redex.fr