KRP		Page
PERFORMANCE SHEET	RX183-006-A	1/2

CUSTOMER:	YONG JU PRECISION TECHNOL	CUSTOMER ORDER REF:	YONG JU RX104306T
DISTRIBUTOR:		REDEX ORDER REF:	209079
DESIGNATION:	KRP3+R.31.4.H	SERIAL NUMBER:	898065
CODE:	RX128565-12	MOTOR FLANGE CODE:	

For the installation, please refer to User Manual KRP (182/008)

SPECIFIC REMARKS:

Product images are for illustrative purposes only.

REDEX ANDANTEX
ZI-BP79
F45210 FERRIERES
www.redex.fr
Tel: +33 2 38 94 42 00
Fax: +33 2 38 94 42 99
Email: info@redex.fr

KRP		Page
PERFORMANCE SHEET	RX183-006-A	2/2

EXTERNAL DIMENSIONS & INTERFACES: SN: 898065

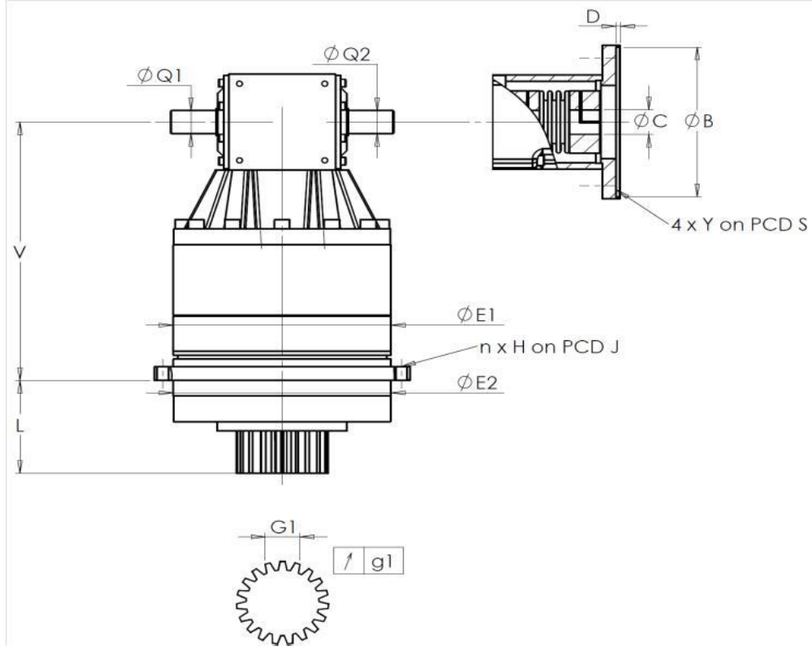

General tolerance: Js13	Cmm	Automatic / manual coordinate-measuring machine	µm	Micrometer	Cr	Calliper rule	Di	Dial indicator	Pg	Plug gauge

HOUSING						OUTPUT PINION						MOTOR FLANGE				
requirement					measure	requirement					measure	requirement				measure
					L2040						Q1814					-
		E1	255h7 $^{0}_{-0,052}$	µm	254.97	Span dimension over 3 teeth						Ø	B		µm	
		E2	255h7 $^{0}_{-0,052}$	µm	254.97			G1	39,25 $^{0}_{-0,03}$	Cmm	39,235	Ø	C		µm	
	n x H on PCD J		16 Ø13,5 on PCD 280	Cr				g1	0,022	Di	0,02		D		Cr	
				Cr	OK							Ø	S1		Cr	
		V	337	µm	337.2	No-load input torque						Ø	Y1		Pg	
		L	121	µm	121.05		Line 1				0,8 Nm					
	Ø	Q1	30 $^{+0,009}_{-0,004}$	µm	30							Noise level				
	Ø	Q2	30 $^{+0,009}_{-0,004}$	µm	30					Line	Stiffness	@1600 rpm input (dB(A))				70,0
							Torsional stiffness (Nm/arcmin)			1	473,03					
							Radial stiffness (N/µm)			1	1186					

Date: 08/12/2015 **Visa:** J ONGANER

Version: A

REDEX ANDANTEX
ZI-BP79
F45210 FERRIERES
www.redex.fr
Tel: +33 2 38 94 42 00
Fax: +33 2 38 94 42 99
Email: info@redex.fr