# KRP

| PERFORMANCE SHEET | RX183-006-A | Page 1/2 |
|---|---|---|

| | | | |
|---|---|---|---|
| **CUSTOMER:** | YONG JU PRECISION TECHNOL | **CUSTOMER ORDER REF:** | YONG JU RX104304T |
| **DISTRIBUTOR:** | | **REDEX ORDER REF:** | 209022 |
| **DESIGNATION:** | KRP3+R.31.4.H | **SERIAL NUMBER:** | 897481 |
| **CODE:** | RX128565-12 | **MOTOR FLANGE CODE:** | |

**For the installation, please refer to User Manual KRP (182/008)**

**SPECIFIC REMARKS:**

Product images are for illustrative purposes only.


REDEX ANDANTEX

ZI-BP79
F45210 FERRIERES
www.redex.fr

Tel: +33 2 38 94 42 00
Fax: +33 2 38 94 42 99
Email: info@redex.fr


# KRP

| PERFORMANCE SHEET | RX183-006-A | Page 2/2 |
|---|---|---|

**EXTERNAL DIMENSIONS & INTERFACES:** **SN:** 897481

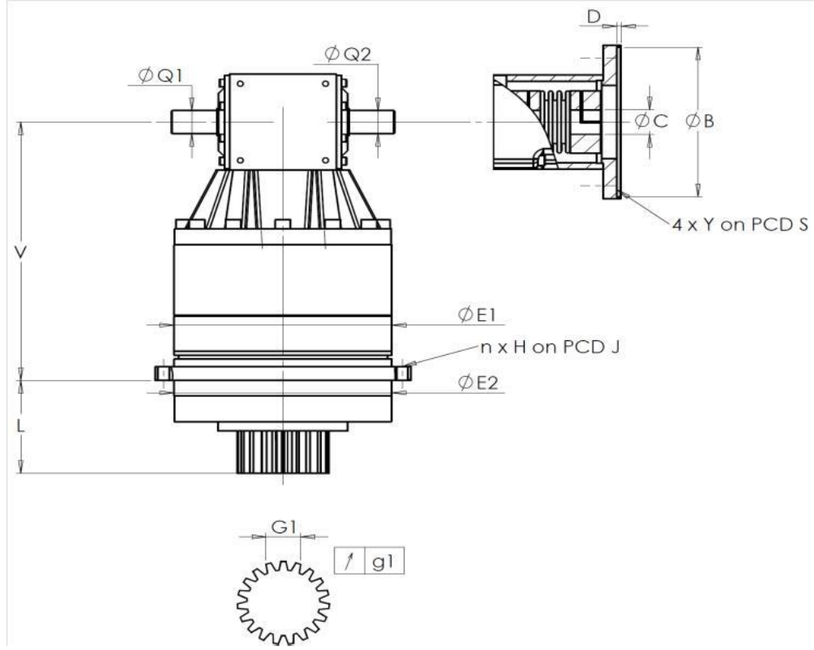


| General tolerance: Js13 | *Cmm* Automatic / manual coordinate-measuring machine | *µm* Micrometer | *Cr* Calliper rule | *Di* Dial indicator | *Pg* Plug gauge |
|---|---|---|---|---|---|

| HOUSING requirement | | | | | HOUSING measure | OUTPUT PINION requirement | | | | OUTPUT PINION measure | MOTOR FLANGE requirement | | | | MOTOR FLANGE measure |
|---|---|---|---|---|---|---|---|---|---|---|---|---|---|---|---|
| | | | | | K2872 | | | | | Q0504 | | | | | - |
| | E1 | 255h7 $^{0}_{-0,052}$ | | µm | 254.98 | Span dimension over 3 teeth | | | | | Ø | B | | µm | |
| | E2 | 255h7 $^{0}_{-0,052}$ | | µm | 254.99 | | G1 | 39,25 $^{0}_{-0,03}$ | Cmm | 39,235 | Ø | C | | µm | |
| n x H on PCD J | | 16 Ø13,5 on PCD 280 | | Cr | | ↗ | g1 | 0,022 | Di | 0,01 | | D | | Cr | |
| | | | | Cr | OK | | | | | | Ø | S1 | | Cr | |
| | V | 337 | | µm | 337.26 | No-load input torque | | | | | Ø | Y1 | | Pg | |
| | L | 121 | | µm | 120.96 | Line 1 | | | | 1,4 Nm | | | | | |
| Ø | Q1 | 30 $^{+0,009}_{-0,004}$ | | µm | 30.005 | | | | | | Noise level | | | | |
| Ø | Q2 | 30 $^{+0,009}_{-0,004}$ | | µm | 30.005 | | | | Line | Stiffness | @1600 rpm input (dB(A)) | | | | 71,5 |
| | | | | | | Torsional stiffness (Nm/arcmin) | | | 1 | 473,03 | | | | | |
| | | | | | | Radial stiffness (N/µm) | | | 1 | 1188 | | | | | |

**Date:** 16/07/2015 **Visa:** JJ PELLÉ

**Version:** A


REDEX ANDANTEX

ZI-BP79
F45210 FERRIERES
www.redex.fr

Tel: +33 2 38 94 42 00
Fax: +33 2 38 94 42 99
Email: info@redex.fr