KRP

PERFORMANCE SHEET	RX183-006-A	Page 1/2

CUSTOMER:	YONG JU PRECISION TECHNOL	**CUSTOMER ORDER REF:**	YONG JU RX104304T
DISTRIBUTOR:		**REDEX ORDER REF:**	209022
DESIGNATION:	KRP3+R.31.4.H	**SERIAL NUMBER:**	897480
CODE:	RX128565-12	**MOTOR FLANGE CODE:**	

For the installation, please refer to User Manual KRP (182/008)

SPECIFIC REMARKS:

Product images are for illustrative purposes only.

REDEX ANDANTEX

ZI-BP79
F45210 FERRIERES
www.redex.fr

Tel: +33 2 38 94 42 00
Fax: +33 2 38 94 42 99
Email: info@redex.fr

KRP

PERFORMANCE SHEET	RX183-006-A	Page 2/2

EXTERNAL DIMENSIONS & INTERFACES: **SN:** 897480

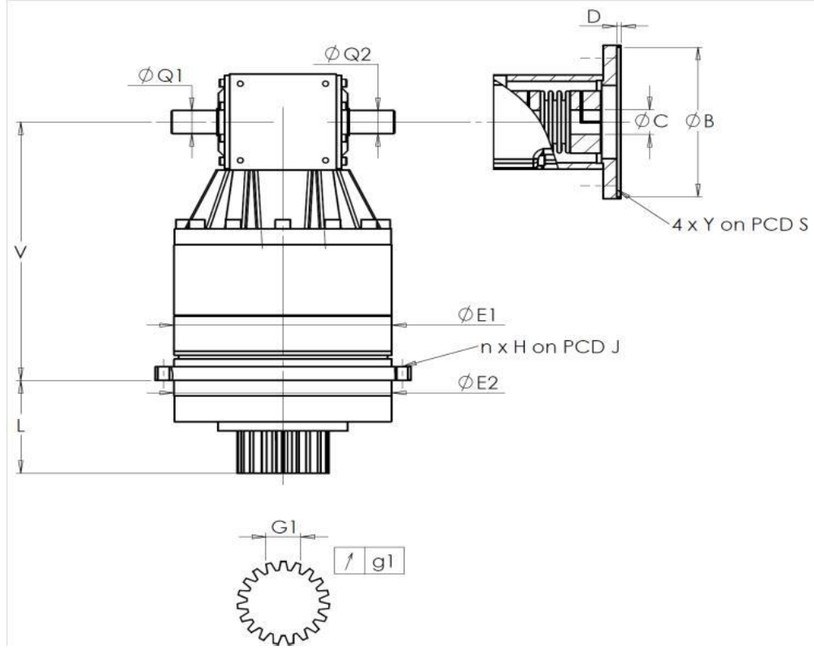

General tolerance: Js13 | *Cmm* Automatic / manual coordinate-measuring machine | *µm* Micrometer | *Cr* Calliper rule | *Di* Dial indicator | *Pg* Plug gauge

HOUSING requirement					HOUSING measure	OUTPUT PINION requirement				OUTPUT PINION measure	MOTOR FLANGE requirement				MOTOR FLANGE measure
					K6274					Q0503					-
	E1	255h7 $^{0}_{-0,052}$	µm		254.975	Span dimension over 3 teeth					Ø	B		µm	
	E2	255h7 $^{0}_{-0,052}$	µm		254.985		G1	39,25 $^{0}_{-0,03}$	Cmm	39,23	Ø	C		µm	
n x H on PCD J		16 Ø13,5 on PCD 280	Cr			↗	g1	0,022	Di	0,01		D		Cr	
			Cr		OK						Ø	S1		Cr	
	V	337	µm		337.25	No-load input torque					Ø	Y1		Pg	
	L	121	µm		120.95	Line 1				1,5 Nm					
Ø	Q1	30 $^{+0,009}_{-0,004}$	µm		30.000						Noise level				
Ø	Q2	30 $^{+0,009}_{-0,004}$	µm		30.000				Line	Stiffness	@1600 rpm input (dB(A))				72,0
						Torsional stiffness (Nm/arcmin)			1	473,03					
						Radial stiffness (N/µm)			1	1097					

Date: 16/07/2015 **Visa:** JJ PELLÉ

Version: A

REDEX ANDANTEX

ZI-BP79
F45210 FERRIERES
www.redex.fr

Tel: +33 2 38 94 42 00
Fax: +33 2 38 94 42 99
Email: info@redex.fr