KRP

PERFORMANCE SHEET	RX183-006-A	Page 1/2

CUSTOMER:	YONG JU PRECISION TECHNOL	**CUSTOMER ORDER REF:**	YONG JU RX104304T
DISTRIBUTOR:		**REDEX ORDER REF:**	209022
DESIGNATION:	KRP3+R.31.4.H	**SERIAL NUMBER:**	897479
CODE:	RX128565-12	**MOTOR FLANGE CODE:**	

For the installation, please refer to User Manual KRP (182/008)

SPECIFIC REMARKS:

Product images are for illustrative purposes only.

REDEX ANDANTEX

ZI-BP79
F45210 FERRIERES
www.redex.fr

Tel: +33 2 38 94 42 00
Fax: +33 2 38 94 42 99
Email: info@redex.fr

KRP

PERFORMANCE SHEET	RX183-006-A	Page 2/2

EXTERNAL DIMENSIONS & INTERFACES: **SN:** 897479

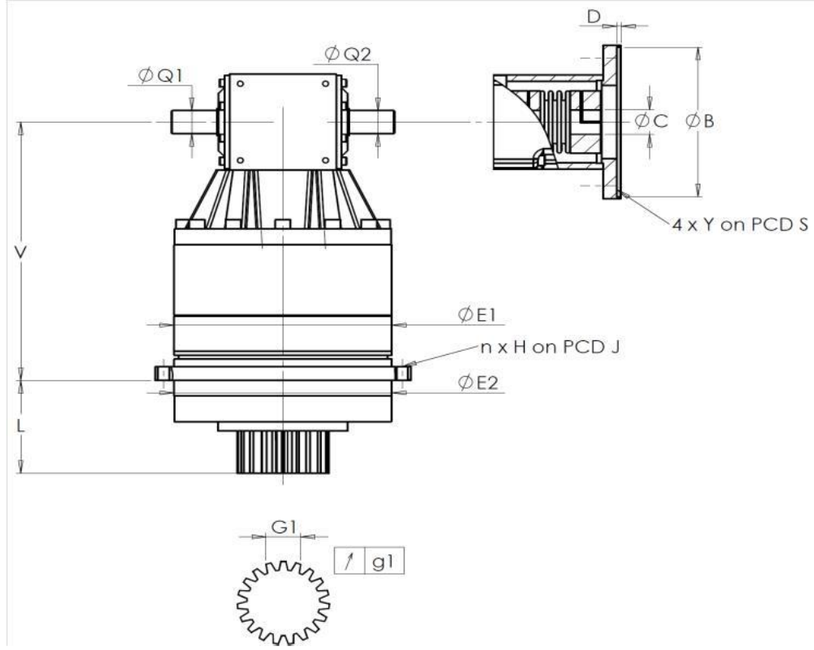

General tolerance: Js13	Cmm	Automatic / manual coordinate-measuring machine	µm	Micrometer	Cr	Calliper rule	Di	Dial indicator	Pg	Plug gauge

HOUSING

	requirement				measure
					K2878
	E1	255h7 $^{0}_{-0,052}$	µm		254.985
	E2	255h7 $^{0}_{-0,052}$	µm		254.99
	n x H on PCD J	16 Ø13,5 on PCD 280	Cr		
			Cr		OK
	V	337	µm		337.22
	L	121	µm		120.83
Ø	Q1	30 $^{+0,009}_{-0,004}$	µm		30.005
Ø	Q2	30 $^{+0,009}_{-0,004}$	µm		30.005

OUTPUT PINION

	requirement				measure
					Q0498
	Span dimension over 3 teeth				
	G1	39,25 $^{0}_{-0,03}$	Cmm		39,236
↗	g1	0,022	Di		0,015
	No-load input torque				
	Line 1				1,1 Nm

	Line	Stiffness
Torsional stiffness (Nm/arcmin)	1	473,03
Radial stiffness (N/µm)	1	1121

MOTOR FLANGE

	requirement				measure
					-
Ø	B		µm		
Ø	C		µm		
	D		Cr		
Ø	S1		Cr		
Ø	Y1		Pg		

Noise level

@1600 rpm input (dB(A))	75,0

Date: 16/07/2015 **Visa:** JJ PELLÉ

Version: A

REDEX ANDANTEX

ZI-BP79
F45210 FERRIERES
www.redex.fr

Tel: +33 2 38 94 42 00
Fax: +33 2 38 94 42 99
Email: info@redex.fr