KRP

PERFORMANCE SHEET	RX183-006-A	Page 1/2

CUSTOMER:	MAKINO	**CUSTOMER ORDER REF:**	150522-IB1 MAKINO
DISTRIBUTOR:	S & F INC	**REDEX ORDER REF:**	209685
DESIGNATION:	KRP4+M.21.3.H.35/48	**SERIAL NUMBER:**	897459
CODE:	RX128414-11	**MOTOR FLANGE CODE:**	RX128583-07

For the installation, please refer to User Manual KRP (182/008)

SPECIFIC REMARKS:

Product images are for illustrative purposes only.

REDEX ANDANTEX

ZI-BP79
F45210 FERRIERES
www.redex.fr

Tel: +33 2 38 94 42 00
Fax: +33 2 38 94 42 99
Email: info@redex.fr

KRP

PERFORMANCE SHEET	RX183-006-A	Page 2/2

EXTERNAL DIMENSIONS & INTERFACES: **SN:** 897459

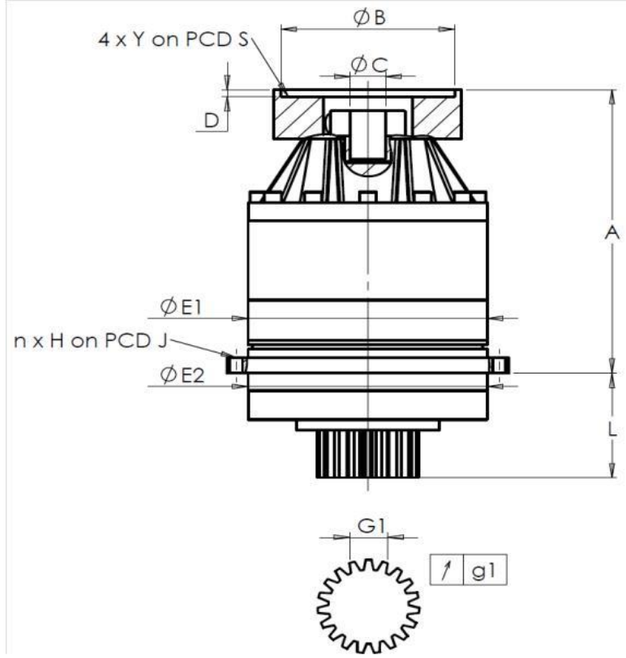

General tolerance: Js13	Cmm	Automatic / manual coordinate-measuring machine	µm	Micrometer	Cr	Calliper rule	Di	Dial indicator	Pg	Plug gauge

HOUSING

	requirement				measure
					J3638
	E1	285h7 $^{0}_{-0,052}$	µm	284.96
	E2	285h7 $^{0}_{-0,052}$	µm	284.96
	n x H on PCD J	16 Ø14 on PCD 310	Cr	
			Cr	OK
	A	373,5	µm	374.36
	L	141	µm	140.99

OUTPUT PINION

	requirement				measure
					R1817
	Span dimension over 3 teeth				
		G1	46,9 $^{0}_{-0,03}$	Cmm	46,88
	↗	g1	0,022	Di	0,02
	No-load input torque				
	Line 1				2 Nm

	Line	Stiffness
Torsional stiffness (Nm/arcmin)	1	810
Radial stiffness (N/µm)	1	1339

MOTOR FLANGE

	requirement				measure
Ø	B	114,3 $^{+0,034}_{+0,012}$	µm	114.33
Ø	C	35 $^{+0,05}_{+0,025}$	µm	35.05
	D	8	Cr	8.16
Ø	S1	200	Cr	200
Ø	Y1	M12	Pg	OK

Noise level

@1300 rpm input (dB(A))	63,0

Date: 08/07/2015 **Visa:** JJ PELLÉ

Version: A

REDEX ANDANTEX

ZI-BP79
F45210 FERRIERES
www.redex.fr

Tel: +33 2 38 94 42 00
Fax: +33 2 38 94 42 99
Email: info@redex.fr