KRP

PERFORMANCE SHEET	RX183-006-A	Page 1/2

CUSTOMER:	BERTSCHE	**CUSTOMER ORDER REF:**	24455 BERTSCHE
DISTRIBUTOR:	ANDANTEX INCORPORATED	**REDEX ORDER REF:**	209500
DESIGNATION:	KRP1+M.10.3.H.28/38	**SERIAL NUMBER:**	897274
CODE:	RX129833-03	**MOTOR FLANGE CODE:**	RX129461-01

For the installation, please refer to User Manual KRP (182/008)

SPECIFIC REMARKS:

Product images are for illustrative purposes only.

REDEX ANDANTEX

ZI-BP79
F45210 FERRIERES
www.redex.fr

Tel: +33 2 38 94 42 00
Fax: +33 2 38 94 42 99
Email: info@redex.fr

KRP

PERFORMANCE SHEET	RX183-006-A	Page 2/2

EXTERNAL DIMENSIONS & INTERFACES: **SN:** 897274

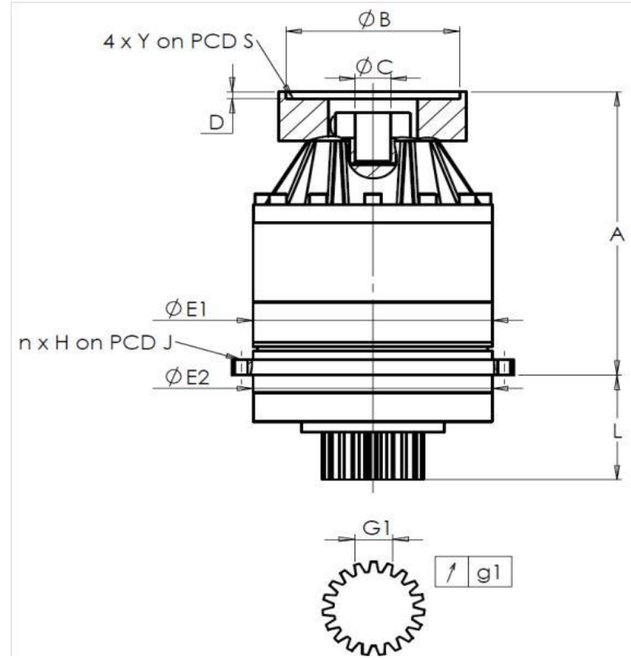

General tolerance: Js13	Cmm	Automatic / manual coordinate-measuring machine	µm	Micrometer	Cr	Calliper rule	Di	Dial indicator	Pg	Plug gauge

HOUSING

requirement				measure
				K7224
	E1	152h7 $^{0}_{-0,04}$	µm	151.98
	E2	140h7 $^{0}_{-0,04}$	µm	139.99
n x H on PCD J		12 Ø6,5 on PCD 168	Cr	
			Cr	OK
	A	202	µm	203.09
	L	71	µm	70.72

OUTPUT PINION

requirement				measure
				Q2318
Span dimension over 3 teeth				
	G1	23,28 $^{0}_{-0,03}$	Cmm	23,27
↗	g1	0,021	Di	0,02
No-load input torque				
Line 1				0,5 Nm

	Line	Stiffness
Torsional stiffness (Nm/arcmin)	1	81
Radial stiffness (N/µm)	1	384

MOTOR FLANGE

requirement				measure
Ø	B	131	µm	131.03
Ø	C	32 $^{+0,05}_{+0,025}$	µm	32.045
	D	5	Cr	5.55
Ø	S1	165	Cr	165
Ø	Y1	M10	Pg	OK

Noise level

@1600 rpm input (dB(A))	67,0

Date: 20/05/2015 **Visa:** JJ PELLÉ

Version: A

REDEX ANDANTEX

ZI-BP79
F45210 FERRIERES
www.redex.fr

Tel: +33 2 38 94 42 00
Fax: +33 2 38 94 42 99
Email: info@redex.fr