KRP

PERFORMANCE SHEET	RX183-006-A	Page 1/2

CUSTOMER:	ELECTROIMPACT	**CUSTOMER ORDER REF:**	24324 ELECTROIMPACT
DISTRIBUTOR:	ANDANTEX INCORPORATED	**REDEX ORDER REF:**	209360
DESIGNATION:	KRP4+M.7.3.H.60/75	**SERIAL NUMBER:**	897269
CODE:	RX128414-02	**MOTOR FLANGE CODE:**	RX129604-05

For the installation, please refer to User Manual KRP (182/008)

SPECIFIC REMARKS:

Product images are for illustrative purposes only.

REDEX ANDANTEX
ZI-BP79
F45210 FERRIERES
www.redex.fr
Tel: +33 2 38 94 42 00
Fax: +33 2 38 94 42 99
Email: info@redex.fr

KRP

PERFORMANCE SHEET	RX183-006-A	Page 2/2

EXTERNAL DIMENSIONS & INTERFACES: **SN:** 897269

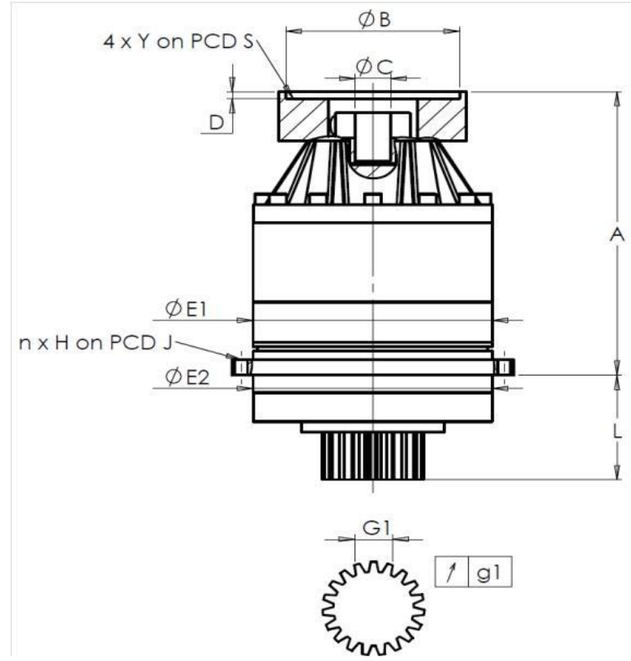

General tolerance: Js13	Cmm	Automatic / manual coordinate-measuring machine	µm	Micrometer	Cr	Calliper rule	Di	Dial indicator	Pg	Plug gauge

HOUSING requirement					HOUSING measure	OUTPUT PINION requirement				OUTPUT PINION measure	MOTOR FLANGE requirement				MOTOR FLANGE measure
					H8009					R1816					
		E1	285h7 $^{0}_{-0,052}$	µm	284.98	Span dimension over 3 teeth					Ø	B	251	µm	251.1
		E2	285h7 $^{0}_{-0,052}$	µm	284.98		G1	46,9 $^{0}_{-0,03}$	Cmm	46,88	Ø	C	T65	µm	OK
	n x H on PCD J		16 Ø14 on PCD 310	Cr		↗	g1	0,022	Di	0,015		D	8	Cr	8.29
				Cr	OK						Ø	S1	300	Cr	300
		A	383	µm	383.95	No-load input torque					Ø	Y1	M16	Pg	OK
		L	141	µm	140.85	Line 1				8 Nm					

	Line	Stiffness
Torsional stiffness (Nm/arcmin)	1	746
Radial stiffness (N/µm)	1	1111

Noise level	
@1500 rpm input (dB(A))	69,0

Date: 17/06/2015 **Visa:** JJ PELLÉ

Version: A

REDEX ANDANTEX
ZI-BP79
F45210 FERRIERES
www.redex.fr
Tel: +33 2 38 94 42 00
Fax: +33 2 38 94 42 99
Email: info@redex.fr