KRP

PERFORMANCE SHEET	RX183-006-A	Page 1/2

CUSTOMER:	ELECTROIMPACT	**CUSTOMER ORDER REF:**	24324 ELECTROIMPACT
DISTRIBUTOR:	ANDANTEX INCORPORATED	**REDEX ORDER REF:**	209360
DESIGNATION:	KRP4+M.7.3.H.60/75	**SERIAL NUMBER:**	897268
CODE:	RX128414-02	**MOTOR FLANGE CODE:**	RX129604-05

For the installation, please refer to User Manual KRP (182/008)

SPECIFIC REMARKS:

Product images are for illustrative purposes only.

REDEX ANDANTEX
ZI-BP79
F45210 FERRIERES
www.redex.fr
Tel: +33 2 38 94 42 00
Fax: +33 2 38 94 42 99
Email: info@redex.fr

KRP

PERFORMANCE SHEET	RX183-006-A	Page 2/2

EXTERNAL DIMENSIONS & INTERFACES: **SN:** 897268

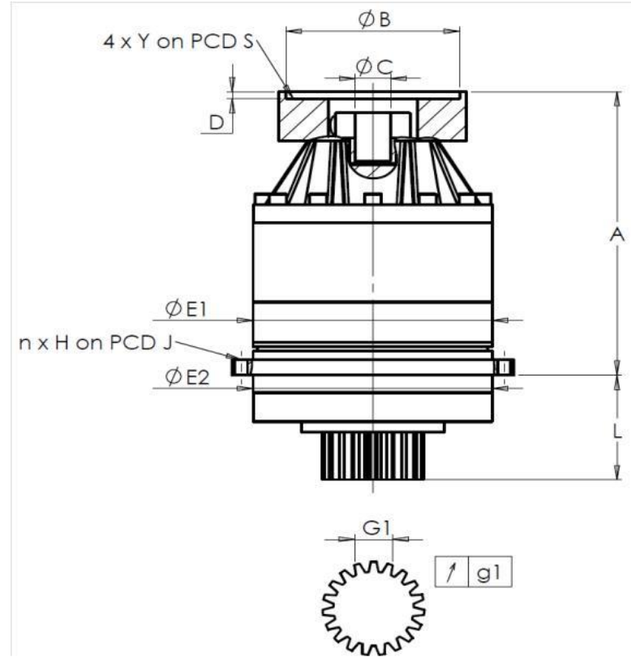

General tolerance: Js13	Cmm	Automatic / manual coordinate-measuring machine	µm	Micrometer	Cr	Calliper rule	Di	Dial indicator	Pg	Plug gauge

HOUSING						OUTPUT PINION						MOTOR FLANGE				
requirement					measure	requirement					measure	requirement				measure
					G8174						R1775					
	E1	285h7 $^{0}_{-0,052}$		µm	284.97	Span dimension over 3 teeth						Ø	B	251	µm	251.1
	E2	285h7 $^{0}_{-0,052}$		µm	284.96		G1	46,9 $^{0}_{-0,03}$		Cmm	46,885	Ø	C	T65	µm	OK
n x H on PCD J		16 Ø14 on PCD 310		Cr		↗	g1	0,022		Di	0,02		D	8	Cr	8.48
				Cr	OK							Ø	S1	300	Cr	300
	A	383		µm	383.84	No-load input torque						Ø	Y1	M16	Pg	OK
	L	141		µm	141.03	Line 1					7 Nm					

	Line	Stiffness
Torsional stiffness (Nm/arcmin)	1	746
Radial stiffness (N/µm)	1	1355

Noise level	
@1500 rpm input (dB(A))	68,5

Date: 17/06/2015 **Visa:** JJ PELLÉ

Version: A

REDEX ANDANTEX
ZI-BP79
F45210 FERRIERES
www.redex.fr
Tel: +33 2 38 94 42 00
Fax: +33 2 38 94 42 99
Email: info@redex.fr