KRP

PERFORMANCE SHEET	RX183-006-A	Page 1/2

CUSTOMER:	ELECTROIMPACT	**CUSTOMER ORDER REF:**	24324 ELECTROIMPACT
DISTRIBUTOR:	ANDANTEX INCORPORATED	**REDEX ORDER REF:**	209360
DESIGNATION:	KRP4+M.7.3.H.60/75	**SERIAL NUMBER:**	897264
CODE:	RX128414-02	**MOTOR FLANGE CODE:**	RX129604-05

For the installation, please refer to User Manual KRP (182/008)

SPECIFIC REMARKS:

Product images are for illustrative purposes only.

REDEX ANDANTEX
ZI-BP79
F45210 FERRIERES
www.redex.fr
Tel: +33 2 38 94 42 00
Fax: +33 2 38 94 42 99
Email: info@redex.fr

KRP

PERFORMANCE SHEET	RX183-006-A	Page 2/2

EXTERNAL DIMENSIONS & INTERFACES: **SN:** 897264

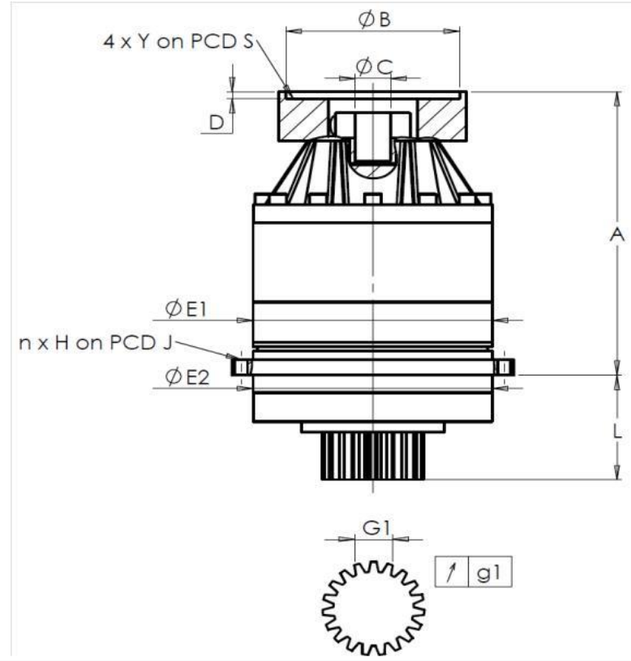

General tolerance: Js13	Cmm	Automatic / manual coordinate-measuring machine	µm	Micrometer	Cr	Calliper rule	Di	Dial indicator	Pg	Plug gauge

HOUSING

requirement				measure	
				H8003	
	E1	285h7 $^{0}_{-0,052}$	µm	285	
	E2	285h7 $^{0}_{-0,052}$	µm	285	
n x H on PCD J		16 Ø14 on PCD 310	Cr		
			Cr	OK	
	A	383	µm	383.815	
	L	141	µm	141.1	

OUTPUT PINION

requirement				measure	
Span dimension over 3 teeth					
	G1	46,9 $^{0}_{-0,03}$	Cmm	46,885	
↗	g1	0,022	Di	0,02	
No-load input torque					
Line 1				2,5 Nm	

	Line	Stiffness
Torsional stiffness (Nm/arcmin)	1	746
Radial stiffness (N/µm)	1	1008

MOTOR FLANGE

requirement				measure
Ø	B	251	µm	251.11
Ø	C	T65	µm	OK
	D	8	Cr	8.4
Ø	S1	300	Cr	300
Ø	Y1	M16	Pg	OK

Noise level

@1500 rpm input (dB(A))	69,5

Date: 29/06/2015 **Visa:** JJ PELLÉ

Version: A

REDEX ANDANTEX
ZI-BP79
F45210 FERRIERES
www.redex.fr
Tel: +33 2 38 94 42 00
Fax: +33 2 38 94 42 99
Email: info@redex.fr