| KRP | | Page |
|---|---|---|
| PERFORMANCE SHEET | RX183-006-A | 1/2 |

| | | | |
|---|---|---|---|
| **CUSTOMER:** | ELECTROIMPACT | **CUSTOMER ORDER REF:** | 24324 ELECTROIMPACT |
| **DISTRIBUTOR:** | ANDANTEX INCORPORATED | **REDEX ORDER REF:** | 209360 |
| **DESIGNATION:** | KRP4+M.7.3.H.60/75 | **SERIAL NUMBER:** | 897260 |
| **CODE:** | RX128414-02 | **MOTOR FLANGE CODE:** | RX129604-05 |

**For the installation, please refer to User Manual KRP (182/008)**

**SPECIFIC REMARKS:**

Product images are for illustrative purposes only.


REDEX ANDANTEX

ZI-BP79
F45210 FERRIERES
www.redex.fr

Tel: +33 2 38 94 42 00
Fax: +33 2 38 94 42 99
Email: info@redex.fr


| KRP | | Page |
|---|---|---|
| PERFORMANCE SHEET | RX183-006-A | 2/2 |

**EXTERNAL DIMENSIONS & INTERFACES:** **SN:** 897260

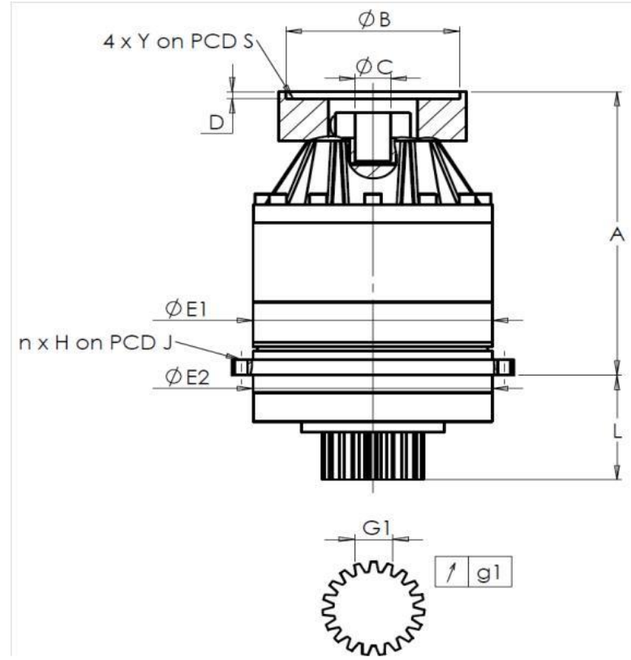


General tolerance: Js13 | *Cmm* Automatic / manual coordinate-measuring machine | *µm* Micrometer | *Cr* Calliper rule | *Di* Dial indicator | *Pg* Plug gauge

| HOUSING | | | | | OUTPUT PINION | | | | | MOTOR FLANGE | | | | |
|---|---|---|---|---|---|---|---|---|---|---|---|---|---|---|
| requirement | | | | measure | requirement | | | | measure | requirement | | | | measure |
| | | | | H8022 | | | | | R1786 | | | | | |
| | E1 | 285h7 $^{0}_{-0,052}$ | µm | 284.99 | Span dimension over 3 teeth | | | | | Ø | B | 251 | µm | 251.12 |
| | E2 | 285h7 $^{0}_{-0,052}$ | µm | 284.98 | | G1 | 46,9 $^{0}_{-0,03}$ | Cmm | 46,886 | Ø | C | T65 | µm | OK |
| n x H on PCD J | | 16 Ø14 on PCD 310 | Cr | | ↗ | g1 | 0,022 | Di | 0,01 | | D | 8 | Cr | 8.49 |
| | | | Cr | OK | | | | | | Ø | S1 | 300 | Cr | 300 |
| | A | 383 | µm | 383.9 | No-load input torque | | | | | Ø | Y1 | M16 | Pg | OK |
| | L | 141 | µm | 141.09 | Line 1 | | | | 7,5 Nm | | | | | |

| | Line | Stiffness |
|---|---|---|
| Torsional stiffness (Nm/arcmin) | 1 | 746 |
| Radial stiffness (N/µm) | 1 | 1190 |

| Noise level | |
|---|---|
| @1500 rpm input (dB(A)) | |

**Date:** 29/06/2015 **Visa:** JJ PELLÉ

**Version:** A


REDEX ANDANTEX

ZI-BP79
F45210 FERRIERES
www.redex.fr

Tel: +33 2 38 94 42 00
Fax: +33 2 38 94 42 99
Email: info@redex.fr