# KRP

| PERFORMANCE SHEET | RX183-006-A | Page 1/2 |
|---|---|---|

| | | | |
|---|---|---|---|
| **CUSTOMER:** | YONG JU PRECISION | **CUSTOMER ORDER REF:** | YONG JU RX104303T |
| **DISTRIBUTOR:** | | **REDEX ORDER REF:** | 209021 |
| **DESIGNATION:** | KRP3+R.31.4.H | **SERIAL NUMBER:** | 897111 |
| **CODE:** | RX128565-12 | **MOTOR FLANGE CODE:** | |

**For the installation, please refer to User Manual KRP (182/008)**

**SPECIFIC REMARKS:**

Product images are for illustrative purposes only.


REDEX ANDANTEX
ZI-BP79
F45210 FERRIERES
www.redex.fr
Tel: +33 2 38 94 42 00
Fax: +33 2 38 94 42 99
Email: info@redex.fr


# KRP

| PERFORMANCE SHEET | RX183-006-A | Page 2/2 |
|---|---|---|

**EXTERNAL DIMENSIONS & INTERFACES:** **SN:** 897111

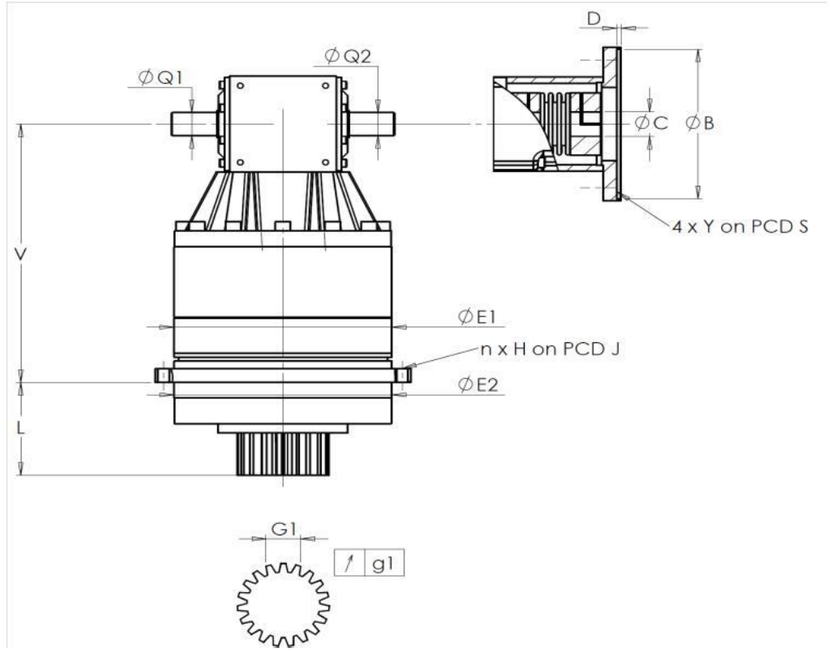


| General tolerance: Js13 | Cmm | Automatic / manual coordinate-measuring machine | µm | Micrometer | Cr | Calliper rule | Di | Dial indicator | Pg | Plug gauge |
|---|---|---|---|---|---|---|---|---|---|---|

**HOUSING**

| | requirement | | | | measure |
|---|---|---|---|---|---|
| | | | | | K2883 |
| | E1 | 255h7 $^{0}_{-0,052}$ | µm | | 254.985 |
| | E2 | 255h7 $^{0}_{-0,052}$ | µm | | 254.985 |
| | n x H on PCD J | 16 Ø13,5 on PCD 280 | Cr | | |
| | | | Cr | | OK |
| | V | 337 | µm | | 337.18 |
| | L | 121 | µm | | 120.96 |
| Ø | Q1 | 30 $^{+0,009}_{-0,004}$ | µm | | 30 |
| Ø | Q2 | 30 $^{+0,009}_{-0,004}$ | µm | | 30 |

**OUTPUT PINION**

| | requirement | | | | measure |
|---|---|---|---|---|---|
| | | | | | R2388 |
| **Span dimension over 3 teeth** | | | | | |
| | G1 | 39,25 $^{0}_{-0,03}$ | Cmm | | 39,24 |
| ↗ | g1 | 0,022 | Di | | 0,005 |
| **No-load input torque** | | | | | |
| | Line 1 | | | | 0,7 Nm |

| | Line | Stiffness |
|---|---|---|
| Torsional stiffness (Nm/arcmin) | 1 | 473 |
| Radial stiffness (N/µm) | 1 | 1111 |

**MOTOR FLANGE**

| | requirement | | | | measure |
|---|---|---|---|---|---|
| | | | | | - |
| Ø | B | | µm | | |
| Ø | C | | µm | | |
| | D | | Cr | | |
| Ø | S1 | | Cr | | |
| Ø | Y1 | | Pg | | |

**Noise level**

| | |
|---|---|
| @1600 rpm input (dB(A)) | 73,5 |

**Date:** 19/06/2015 **Visa:** JJ PELLÉ

**Version:** A


REDEX ANDANTEX
ZI-BP79
F45210 FERRIERES
www.redex.fr
Tel: +33 2 38 94 42 00
Fax: +33 2 38 94 42 99
Email: info@redex.fr