KRP

PERFORMANCE SHEET	RX183-006-A	Page 1/2

CUSTOMER:	PAMA	**CUSTOMER ORDER REF:**	ANDIT 72 PAMA
DISTRIBUTOR:	ANDANTEX S.r.l	**REDEX ORDER REF:**	209350
DESIGNATION:	KRP3+M.21.3.H.28/38	**SERIAL NUMBER:**	896988
CODE:	RX129016-11	**MOTOR FLANGE CODE:**	RX128581-01

For the installation, please refer to User Manual KRP (182/008)

SPECIFIC REMARKS:

Product images are for illustrative purposes only.

REDEX ANDANTEX
ZI-BP79
F45210 FERRIERES
www.redex.fr
Tel: +33 2 38 94 42 00
Fax: +33 2 38 94 42 99
Email: info@redex.fr

KRP

PERFORMANCE SHEET	RX183-006-A	Page 2/2

EXTERNAL DIMENSIONS & INTERFACES: **SN:** 896988

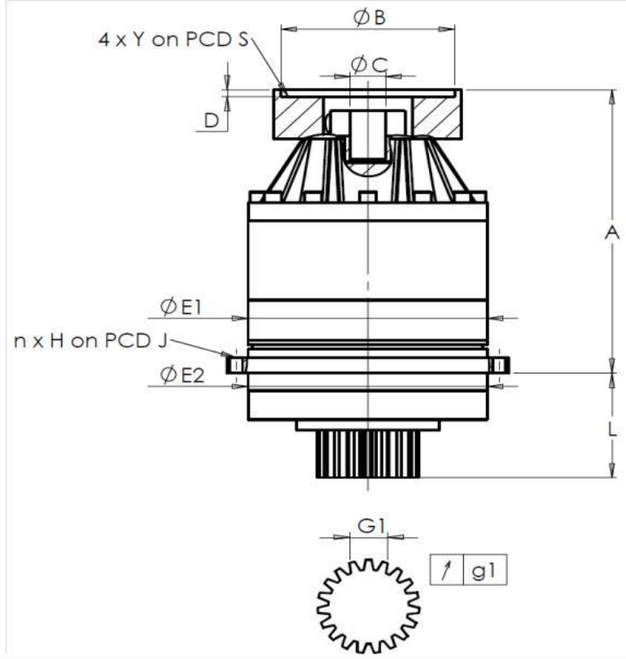

General tolerance: Js13	Cmm	Automatic / manual coordinate-measuring machine	µm	Micrometer	Cr	Calliper rule	Di	Dial indicator	Pg	Plug gauge

HOUSING

requirement				measure	
				K0744	
	E1	255h7 $^{0}_{-0,052}$	µm	254,97	
	E2	255h7 $^{0}_{-0,052}$	µm	254,97	
n x H on PCD J		16 Ø13,5 on PCD 280	Cr	16 Ø13,5 on PCD 280	
			Cr		
	A	328,5	µm	329,57	
	L	121	µm	121,06	

OUTPUT PINION

requirement				measure
				R2384
Span dimension over 3 teeth				
	G1	39,25 $^{0}_{-0,03}$	Cmm	39,24
↗	g1	0,022	Di	0,01
No-load input torque				
Line 1				1,5 Nm

	Line	Stiffness
Torsional stiffness (Nm/arcmin)	1	503
Radial stiffness (N/µm)	1	1004

MOTOR FLANGE

requirement				measure
Ø	B	181	µm	180,99
Ø	C	38 $^{+0,05}_{+0,025}$	µm	38,05
	D	8	Cr	8,53
Ø	S1	215	Cr	215
Ø	Y1	M12	Pg	M12

Noise level

@1600 rpm input (dB(A))	69,5

Date: 08/04/2015 **Visa:** JJ PELLÉ

Version: A

REDEX ANDANTEX
ZI-BP79
F45210 FERRIERES
www.redex.fr
Tel: +33 2 38 94 42 00
Fax: +33 2 38 94 42 99
Email: info@redex.fr