KRP

PERFORMANCE SHEET	RX183-006-A	Page 1/2

CUSTOMER:	PHOENIX	**CUSTOMER ORDER REF:**	PHOENIX 24157
DISTRIBUTOR:	ANDANTEX INCORPORATED	**REDEX ORDER REF:**	209273
DESIGNATION:	KRP5+M.91.3.H.35/48	**SERIAL NUMBER:**	896986
CODE:	RX132915-33	**MOTOR FLANGE CODE:**	RX128583-06

For the installation, please refer to User Manual KRP (182/008)

SPECIFIC REMARKS:

Product images are for illustrative purposes only.

REDEX ANDANTEX

ZI-BP79
F45210 FERRIERES
www.redex.fr

Tel: +33 2 38 94 42 00
Fax: +33 2 38 94 42 99
Email: info@redex.fr

KRP

PERFORMANCE SHEET	RX183-006-A	Page 2/2

EXTERNAL DIMENSIONS & INTERFACES: **SN:** 896986

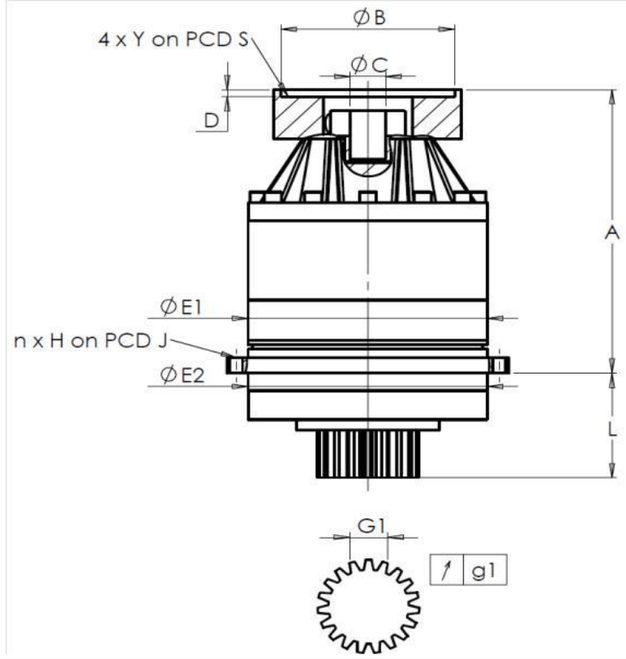

General tolerance: Js13	Cmm	Automatic / manual coordinate-measuring machine	µm	Micrometer	Cr	Calliper rule	Di	Dial indicator	Pg	Plug gauge

HOUSING

	requirement				measure
					L0588
		E1	355j6 +0,018 -0,018	µm	355,005
		E2	355j6 +0,018 -0,018	µm	355,005
	n x H on PCD J		12 Ø17,5 on PCD 385	Cr	12 Ø17,5 on PCD 385
				Cr	
		A	421	µm	421,23
		L	178	µm	178,51

OUTPUT PINION

	requirement				measure
					R1929
	Span dimension over 3 teeth				
		G1	62,97 0 -0,05	Cmm	62,94
	↗	g1	0,03	Di	0,022
	No-load input torque				
	Line 1				1 Nm

	Line	Stiffness
Torsional stiffness (Nm/arcmin)	1	1086
Radial stiffness (N/µm)	1	1337

MOTOR FLANGE

	requirement				measure
Ø	B	115		µm	115,05
Ø	C	35 +0,05 +0,025		µm	35,05
	D	8		Cr	8,24
Ø	S1	200		Cr	200
Ø	Y1	M12		Pg	M12

Noise level

@1000 rpm input (dB(A))	62,5

Date: 15/04/2015 **Visa:** JJ PELLÉ

Version: A

REDEX ANDANTEX

ZI-BP79
F45210 FERRIERES
www.redex.fr

Tel: +33 2 38 94 42 00
Fax: +33 2 38 94 42 99
Email: info@redex.fr